ELENCO SCHEMI ELETTRICI

LIST OF WIRING DIAGRAMS

LISTE DE SCHÉMAS ÉLECTRIQUES

LISTE DER ELEKTROPLÄNE

LISTADO ESQUEMAS ELÉCTRICOS

ПЕРЕЧЕНЬ ЭЛЕКТРОСХЕМ

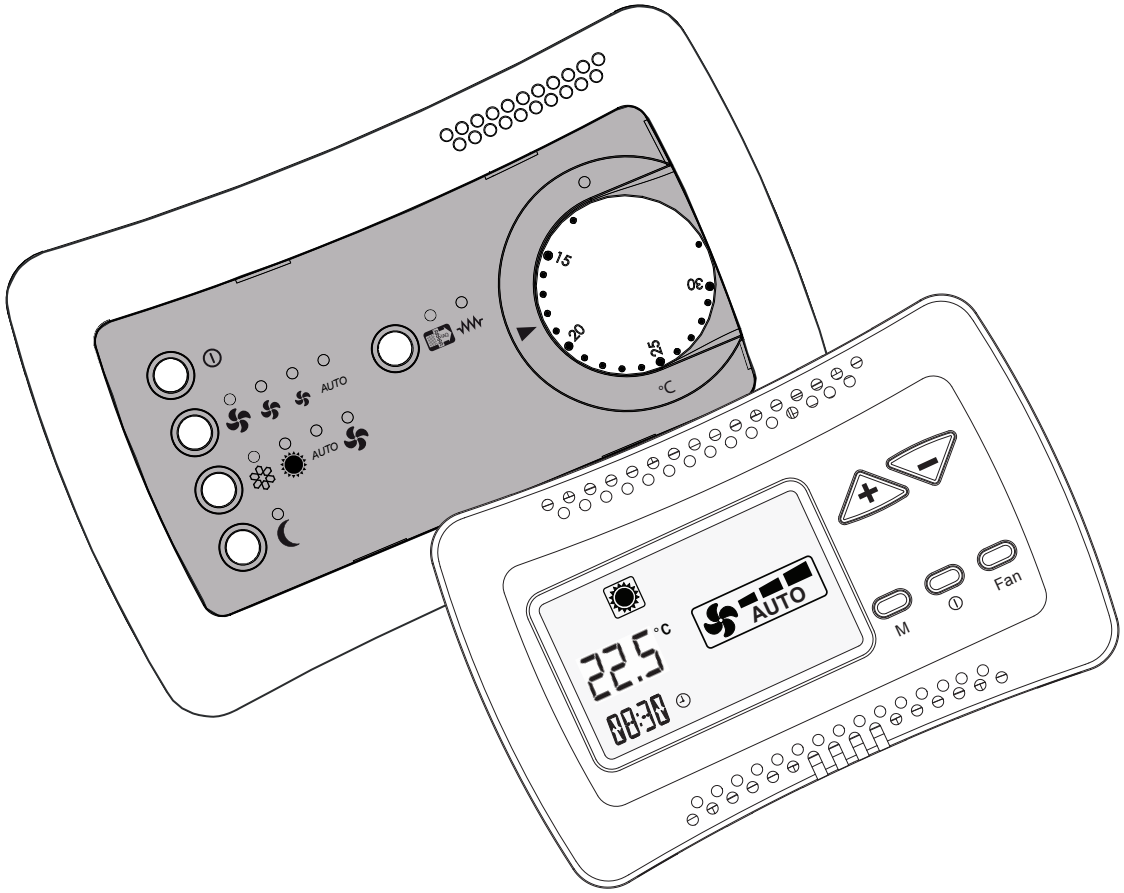

(Questo documento integra il manuale di uso, installazione e manutenzione cod. 4050963A)

(This document supplements the operating manual, installation and maintenance code 4050963A)

11/2020
Cod. 4050963B

LEGENDA

SEC 1 = Scheda Cassette
SEP = Scheda gestione pompa
BLAC = Scheda elettronica Inverter
M = Motoventilatore
E = Valvola acqua (IMPIANTO A 2 TUBI)
E1 = Valvola acqua CALDA o resistenza elettrica
E2 = Valvola acqua FREDDA
= Estate - aria fredda
= Inverno - aria calda
T1 = Sonda aria
T2 = Sonda temperatura acqua/ CHANGE-OVER
T3 = Sonda di minima T3
Q1 = Sezionatore con un polo protetto da fusibile (raccomandato)
EH = Resistenza elettrica
IAQ = Filtro elettronico
MP = Pompa di evacuazione condensa
B2 = Termostato di sicurezza a riarmo automatico
B3 = Termostato di sicurezza a riarmo manuale

GNYE = Giallo/Verde
RD = Rosso = Minima
OG = Arancio = Media
BK = Nero = Massima
BN = Marrone
BU = Blu

A
- Impianto senza valvole
- Termostatazione sul motore

B
- Impianto 2 tubi (1 valvola)
- Termostatazione sulla valvola

C
- Impianto 4 tubi (2 valvole)
- Termostatazione sulle valvole

LEGEND

SEC 1 = Cassette electronic board
SEP = Pump control board
BLAC = Inverter circuit board
M = Fan
E = Water valve (two tube unit)
E1 = Hot water valve or electrical heater
E2 = Cold water valve
= Summer - cold air
= Winter - warm air
T1 = Air probe
T2 = water temperatue probe/ CHANGE-OVER
T3 = T3 low temperature (cut-out thermostat)
Q1 = Circuit breakers with one pole protected by fuse (recommended)
EH = Electrical heater
IAQ = Electronic filter
MP = Condensate pump
B2 = Self reset safety thermostat
B3 = Manual reset safety thermostat

GNYE = Yellow/Green
RD = Red = Low
OG = Orange = Medium
BK = Black = High
BN = Brown
BU = Dark blue

A
- Without valves installation
- Thermostatic control on the fan

B
- 2-tube installation (1 valve)
- Thermostatic control on the valve

C
- 4-tube installation (2 valves)
- Thermostatic control on the valves

LÉGENDE

SEC 1 = Bornier Cassette
SEP = Carte gestion pompe
BLAC = Carte électronique de contrôle
M = Motoventilateur
E = Vanne à eau (installation à 2 tubes)
E1 = Vanne eau chaude ou résistance électrique
E2 = Vanne eau froide
= Eté - air froid
= Hiver - air chaud
T1 = Sonde air
T2 = Sonde de temperature de l'eau / CHANGE-OVER
T3 = Sonde de température minimun T3
Q1 = Interrupteur avec une pôle protégé par fusible (recommandé)
EH = Résistance électrique
IAQ = Filtre electronique
MP = Pompe d'evacuation des condensats
B2 = Thermostat à réarmement automatique
B3 = Thermostat à réarmement manuel

GNYE = Juane/Vert
RD = Rouge = Mini
OG = Orange = Moyenne
BK = Noir = Maxi
BN = Marron
BU = Bleu foncé

A
- Installation sans vannes
- Thermostat sur le ventilateur

B
- Installation à 2 tubes (1 vanne)
- Thermostatation sur le vanne

C
- Installation à 4 tubes (2 vannes)
- Thermostatation sur les vannes

LEGENDE

SEC 1 = Platine Kassetten
SEP = Karte für Pumpenverwaltung
BLAC = Elektronikkarte Inverter
M = Motorventilator
E = Wasserventil (Anlage mit zwei Rohren)
E1 = Warmwasserventil oder Elektrischer Widerstand
E2 = Kaltwasserventil
= Sommer - kalte Luft
= Winter - warme Luft
T1 = Lufttemperaturfühler
T2 = Wassertemperatufuhler / CHANGE-OVER
T3 = Mindesettemperatur-sonde T3
Q1 = Hauptschalter (empfohlen)
EH = Elektrischer Widerstand
IAQ = Elektronsche Filter
MP = Kondensatpumpe
B2 = Thermostat mit automatischem Reset
B3 = Thermostat mit manuellem Reset

GNYE = Gelb/Groen
RD = Rot = Min
OG = Orange = Med
BK = Schwarz = Max
BN = Braun
BU = Blau

A
- Ohne ventile-System
- Temperaturregelung am Ventilator

B
- 2-Leiter-System (1 Ventil)
- Temperaturregelung der Ventil

C
- 4-Leiter-System (2 Ventilen)
- Temperaturregelung der Ventile

LEYENDA

SEC 1 = Tarjeta Cassette del ventiloconvector
SEP = Tarjeta gestión bomba
M = Motoventilador
E = Válvula agua (sistema de climatización a 2 tubos)
E1 = Válvula agua caliente o resistencia eléctrica
E2 = Válvula agua fría
= Verano - aire frio
= Invierno - aire caliente
T1 = Sonde aire
T2 = Sonda de temperatura del agua / CHANGE-OVER
T3 = Sonda T3 de mínima
Q1 = Interruptor de maniobra seccionator de una polo protección con fusible (recomendado)
EH = Resistencia eléctrica
IAQ = Filtre electronico
MP = Bomba de evacuación de condensados
B2 = Termostato de rearme automático
B3 = Termostato de rearme manual

GNYE = Amarillo/Verde
RD = Rojo = Mínima
OG = Naranja = Media
BK = Negro = Máxima
BN = Marrón
BU = Azul

A
- Instalación sin válvulas
- Termostatación sobre el ventilador

B
- Instalación con 2 tubos (1 válvula)
- Termostatación sobre la válvula

C
- Instalación con 4 tubos (2 válvulas)
- Termostatación sobre las válvulas

ЛЕГЕНДА

SEC 1 = электронная плата
SEP = Насос управления Электронная карта
BLAC = Электронный инвертор карты
M = Мотовентилятор
E = Водяной клапан (УСТАНОВКА С 2 ТРУБАМИ)
E1 = Клапан ГОРЯЧЕЙ воды или электрического нагревательного элемента
E2 = Клапан ХОЛОДНОЙ воды
= Лето - холодный воздух
= Зима - горячий воздух
T1 = зонд воздуха
T2 =Температурный зонд воды / Смена сезона внешним устройством
T3 = Зонд минимальной температуры T3
Q1 = Отсекающий выключатель с полюсом, защищённым плавким предохранителем (рекомендуется)
EH = Электрический нагревательный элемент
IAQ = Электрический фильтр
MP = Насос для вывода конденсата
B2 = Предохранительный термостат с автоматической перезарядкой
B3 = Предохранительный термостат с ручной перезарядкой

GNYE = Жёлтый/Зелёный
RD = Красный = Минимальная
OG = Оранжевый = Средняя
BK = Чёрный = Максимальная
BN = Коричневый
BU = Синий

A
- Установка без клапанов
- Термостатическое устройство на двигателе

B
- Установка с 2 трубами (1 клапан)
- Термостатическое устройство на клапане

C
- Установка с 4 трубами (2 клапана)
- Термостатическое устройство на клапанах

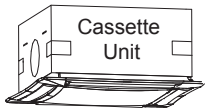

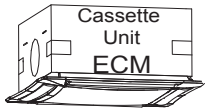

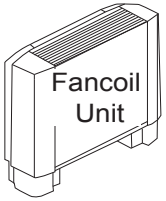

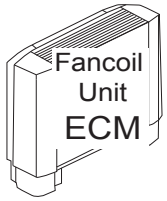

		UNIT CONFIGURATION						
		MOTOR		VALVE/S		PUMP	EL.HEATER	EL. FILTER
UNIT TYPE	WIRING ID	AC	EC	E	E1 E2	MP	EH	IAQ
CASSETTE 0-6	SE-0476	✓				✓		
	SE-0477	✓		✓	✓	✓		
	SE-0478	✓				✓	✓	
				✓		✓	✓	
	SE-0479	✓				✓		✓
				✓		✓		✓
	SE-0480		✓			✓		
	SE-0481		✓	✓	✓	✓		
	SE-0482		✓			✓	✓	
				✓		✓	✓	
CASSETTE 7-8	SE-0689		✓	✓	✓	✓		
	SE-0690		✓	✓		✓	✓	
FAN COIL	SE-0483	✓						
				✓	✓			
	SE-0484	✓					✓	
				✓	✓		✓	
	SE-0485	✓				✓		
				✓	✓	✓		
	SE-0486	✓				✓	✓	
				✓	✓	✓	✓	
	SE-0487	✓						✓
				✓	✓			✓
	SE-0488	✓				✓		✓
				✓	✓	✓		✓
	SE-0489		✓					
				✓	✓			
	SE-0490		✓				✓	
				✓	✓		✓	
	SE-0491		✓			✓		
				✓	✓	✓		
	SE-0492		✓			✓	✓	
				✓	✓	✓	✓	
	SE-0493		✓					✓
				✓	✓			✓
	SE-0494		✓			✓		✓
				✓	✓	✓		✓

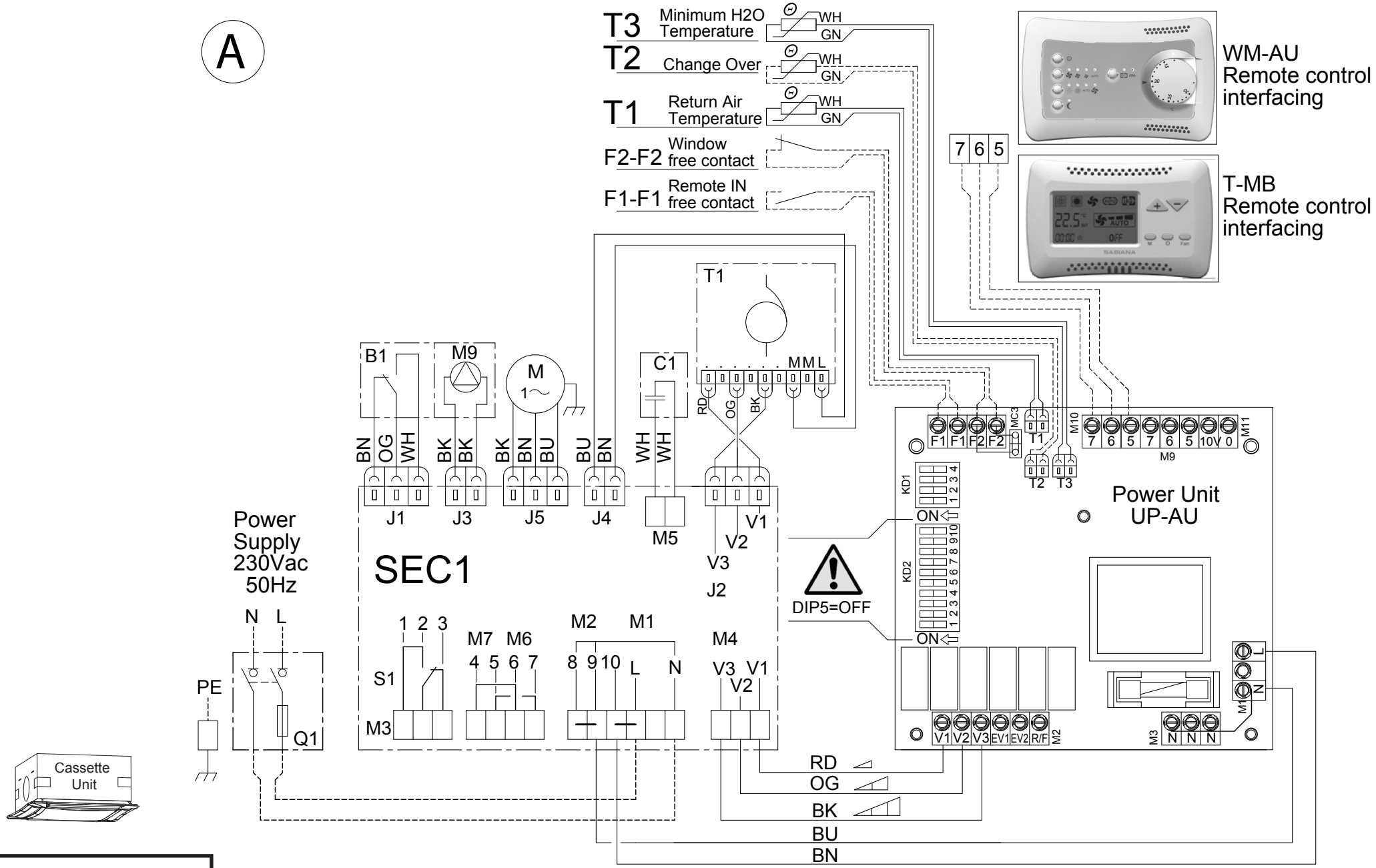
A
T3 Minimum H2O Temperature
T2 Change Over
T1 Return Air Temperature
F2-F2 Window free contact
F1-F1 Remote IN free contact
WH
GN
WM-AU
Remote control
interfacing
T-MB
Remote control
interfacing
7 6 5
T1
MML
RD
OG
BK
B1
M9
M
1~
C1
BN
OG
WH
BK
BK
BK
BN
BU
BU
BN
WH
WH
J1
J3
J5
J4
M5
V1
V2
V3
J2
SEC1
Power
Supply
230Vac
50Hz
N L
PE
Q1
S1
1 2 3
M3
M7 M6
4 5 6 7
M2 M1
8 9 10 L N
M4
V3 V1
V2
DIP5=OFF
F1 F1 F2 F2
MC3
T1
T2 T3
M10
7 6 5 7 6 5 10V 0
M11
M9
KD1
1 2 3 4
ON
KD2
1 2 3 4 5 6 7 8 9 10
ON
Power Unit
UP-AU
V1 V2 V3 EV1 EV2 R/F
M2
M3
N N N
M1
L
N
RD
OG
BK
BU
BN
Cassette
Unit

SE-0476

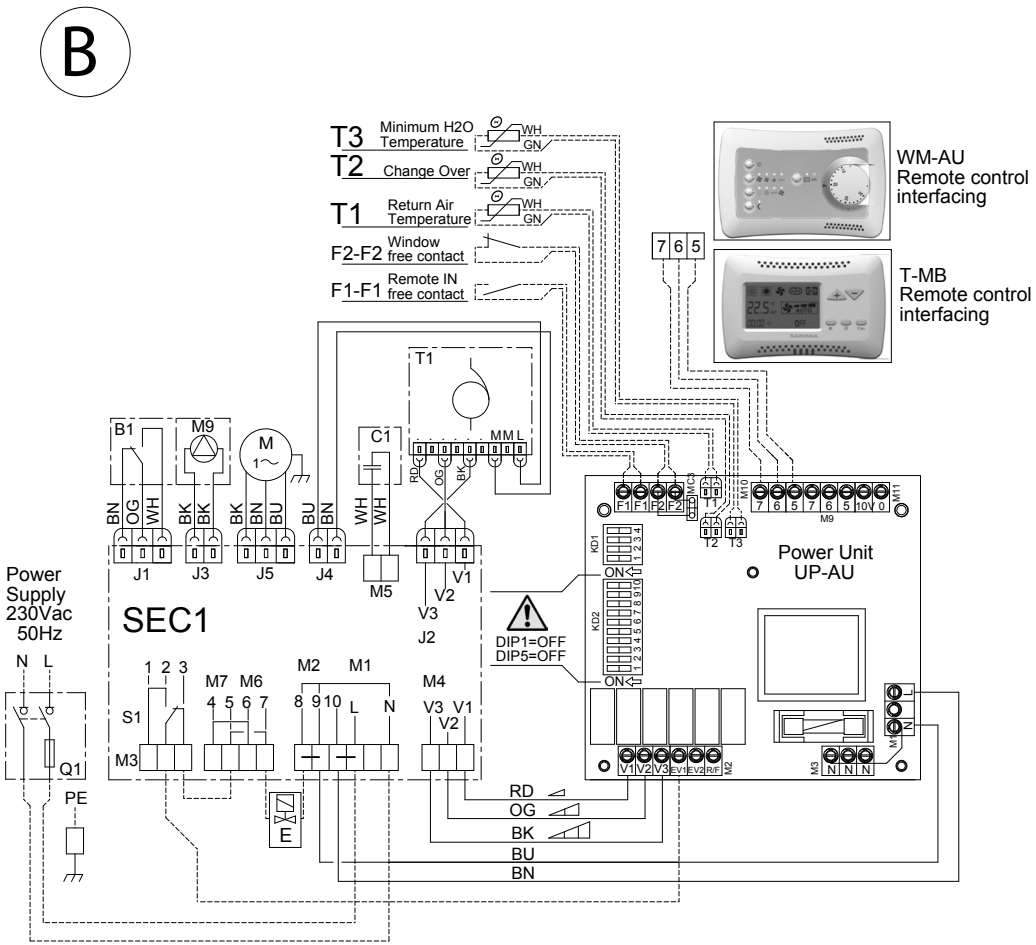
B
T3 Minimum H2O Temperature
T2 Change Over
T1 Return Air Temperature
F2-F2 Window free contact
F1-F1 Remote IN free contact
WM-AU Remote control interfacing
T-MB Remote control interfacing
Power Supply 230Vac 50Hz
SEC1
Power Unit UP-AU
DIP1=OFF
DIP5=OFF
RD
OG
BK
BU
BN

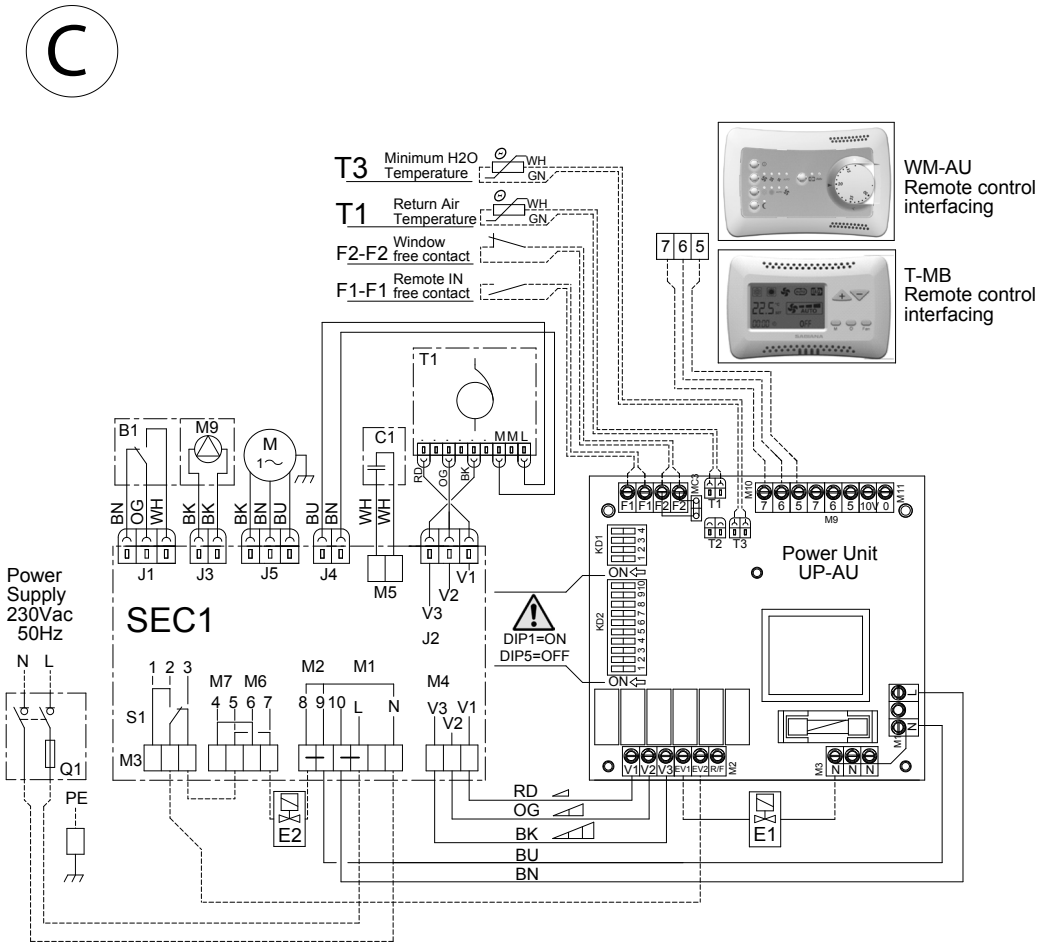
C
T3 Minimum H2O Temperature
T1 Return Air Temperature
F2-F2 Window free contact
F1-F1 Remote IN free contact
WM-AU Remote control interfacing
T-MB Remote control interfacing
Power Supply 230Vac 50Hz
SEC1
Power Unit UP-AU
DIP1=ON
DIP5=OFF
RD
OG
BK
BU
BN

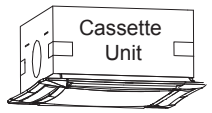
Cassette Unit

SE-0477

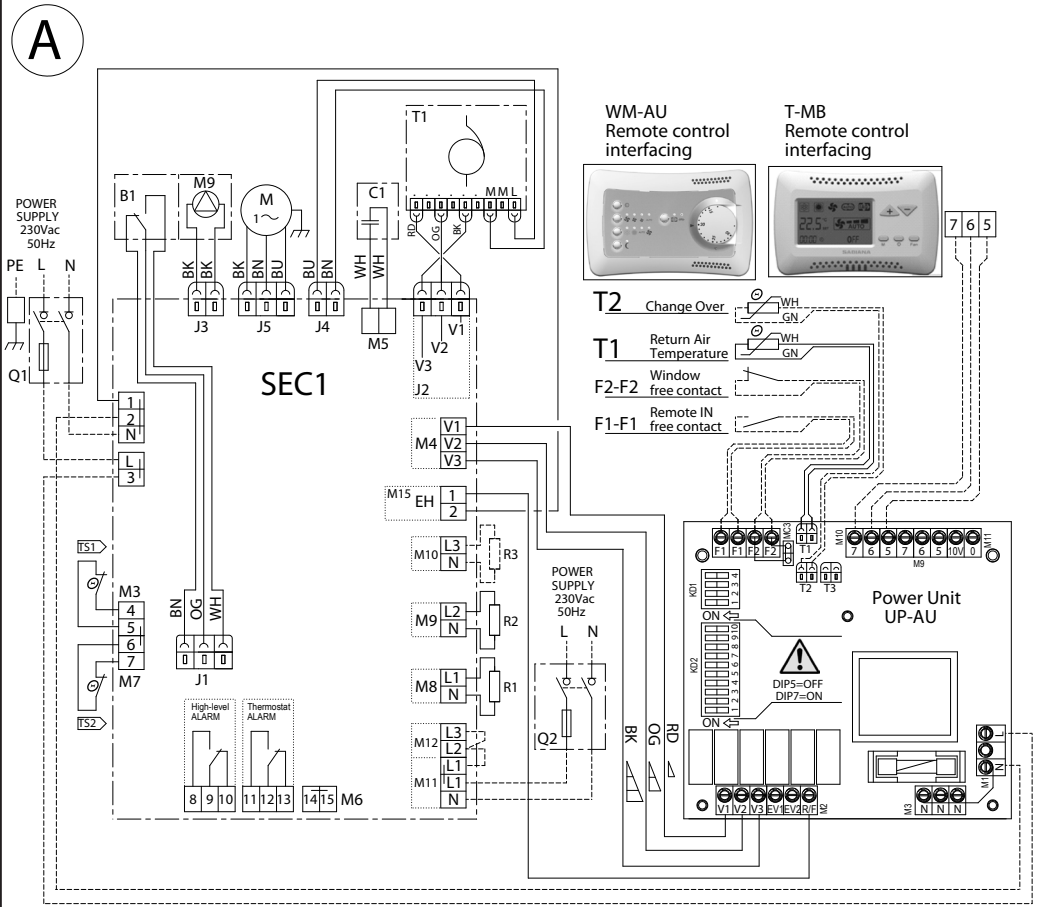
A
POWER SUPPLY 230Vac 50Hz
PE L N
Q1
B1
M9
M
C1
T1
MML
RD OG BK
BK BK BK BN BU BU BN WH WH
J3 J5 J4 M5
V1 V2 V3
J2
SEC1
WM-AU Remote control interfacing
T-MB Remote control interfacing
7 6 5
T2 Change Over
T1 Return Air Temperature
F2-F2 Window free contact
F1-F1 Remote IN free contact
WH GN
M4 V1 V2 V3
M15 EH 1 2
M10 L3 N R3
M9 L2 N R2
M8 L1 N R1
M12 L3 L2
M11 L1 L1 N
TS1 TS2
M3 4 5 6 7 M7
BN OG WH
J1
High-level ALARM
Thermostat ALARM
8 9 10 11 12 13 14 15 M6
POWER SUPPLY 230Vac 50Hz
L N
Q2
BK OG RD
F1 F1 F2 F2 MC3 T1 T2 T3
M10 7 6 5 7 6 5 10V 0 M11
M9
KD1 KD2
ON
DIP5=OFF
DIP7=ON
Power Unit UP-AU
V1 V2 V3 EV1 EV2 R/F M2
M1 N N N

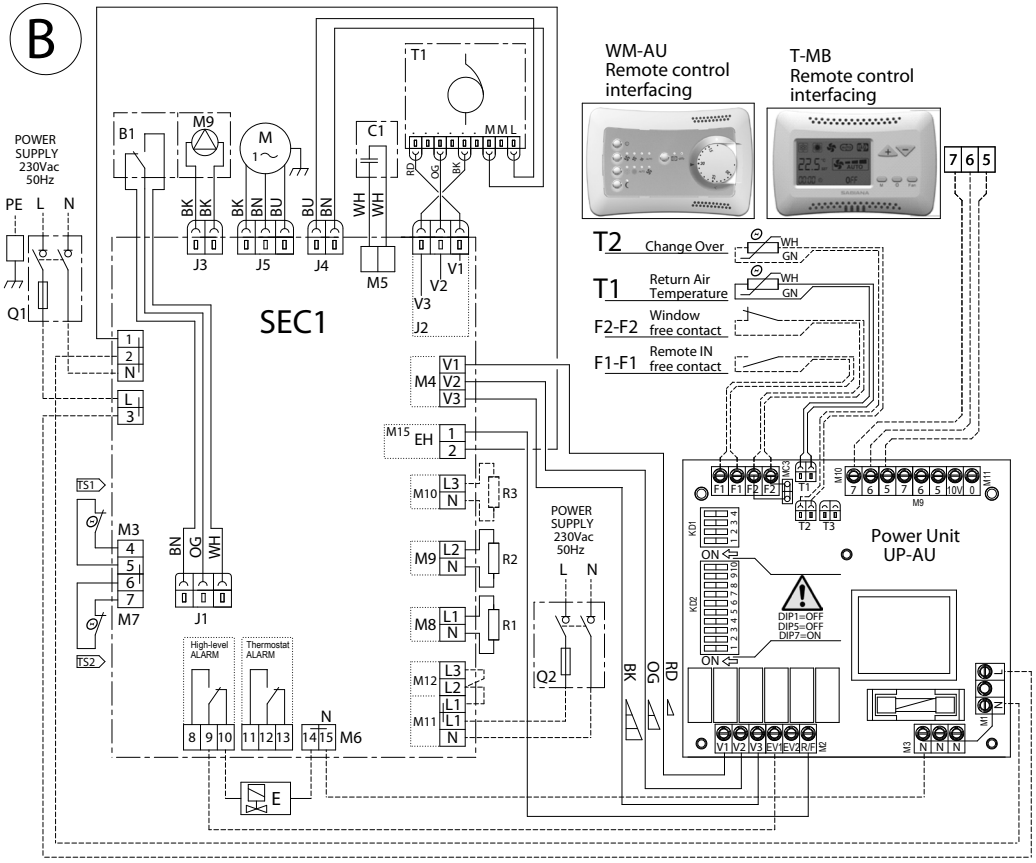
B
POWER SUPPLY 230Vac 50Hz
PE L N
Q1
B1
M9
M
C1
T1
MML
RD OG BK
BK BK BK BN BU BU BN WH WH
J3 J5 J4 M5
V1 V2 V3
J2
SEC1
WM-AU Remote control interfacing
T-MB Remote control interfacing
7 6 5
T2 Change Over
T1 Return Air Temperature
F2-F2 Window free contact
F1-F1 Remote IN free contact
WH GN
M4 V1 V2 V3
M15 EH 1 2
M10 L3 N R3
M9 L2 N R2
M8 L1 N R1
M12 L3 L2
M11 L1 L1 N
TS1 TS2
M3 4 5 6 7 M7
BN OG WH
J1
High-level ALARM
Thermostat ALARM
8 9 10 11 12 13 14 15 M6
E
POWER SUPPLY 230Vac 50Hz
L N
Q2
BK OG RD
F1 F1 F2 F2 MC3 T1 T2 T3
M10 7 6 5 7 6 5 10V 0 M11
M9
KD1 KD2
ON
DIP1=OFF
DIP5=OFF
DIP7=ON
Power Unit UP-AU
V1 V2 V3 EV1 EV2 R/F M2
M1 N N N

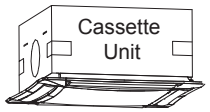
Cassette Unit

SE-0478

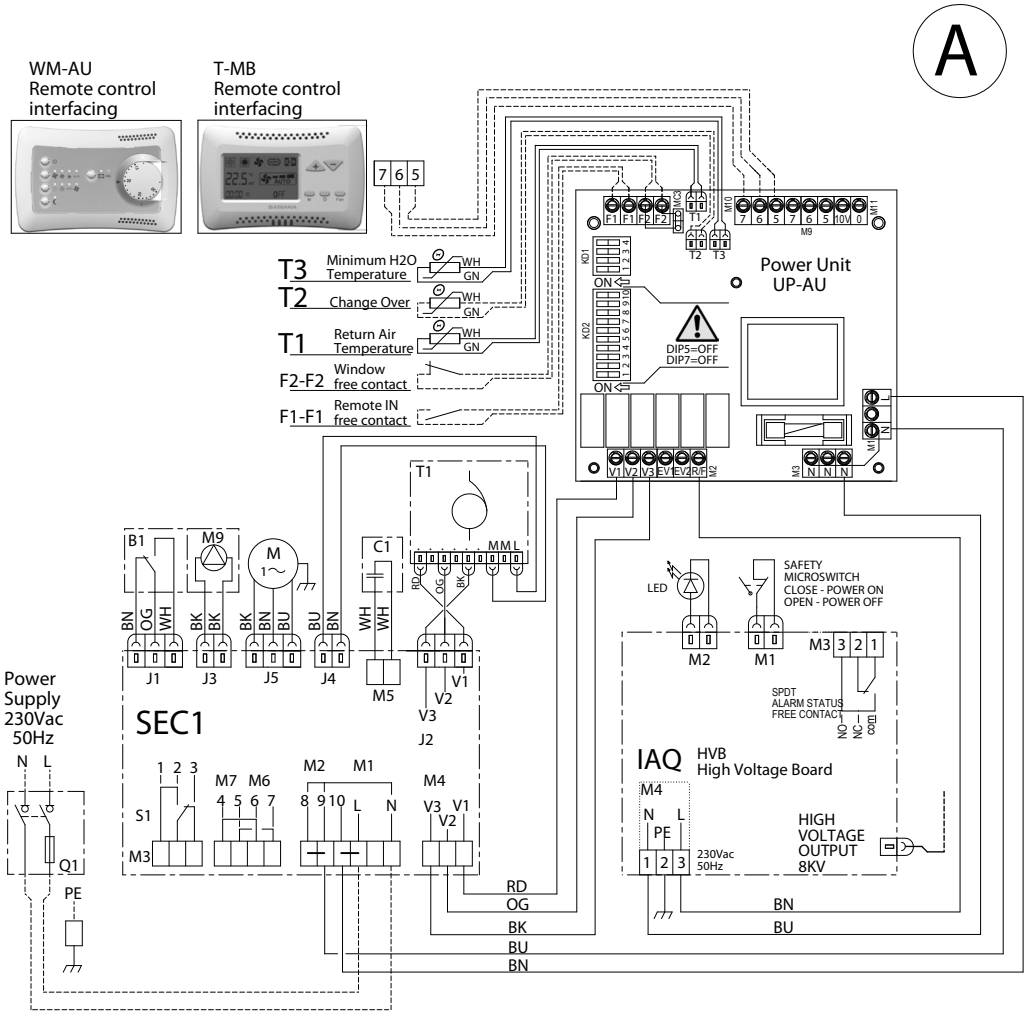
A
WM-AU
Remote control
interfacing
T-MB
Remote control
interfacing
T3 Minimum H2O Temperature
T2 Change Over
T1 Return Air Temperature
F2-F2 Window free contact
F1-F1 Remote IN free contact
Power Unit
UP-AU
DIP5=OFF
DIP7=OFF
T1
B1
M9
M
C1
LED
SAFETY
MICROSWITCH
CLOSE - POWER ON
OPEN - POWER OFF
M2
M1
M3
SPDT
ALARM STATUS
FREE CONTACT
NO
NC
COM
Power
Supply
230Vac
50Hz
N L
Q1
PE
SEC1
J1
J3
J5
J4
M5
V1
V2
V3
J2
S1
M3
M7 M6
M2 M1
M4
IAQ
HVB
High Voltage Board
HIGH
VOLTAGE
OUTPUT
8KV
230Vac
50Hz
RD
OG
BK
BU
BN

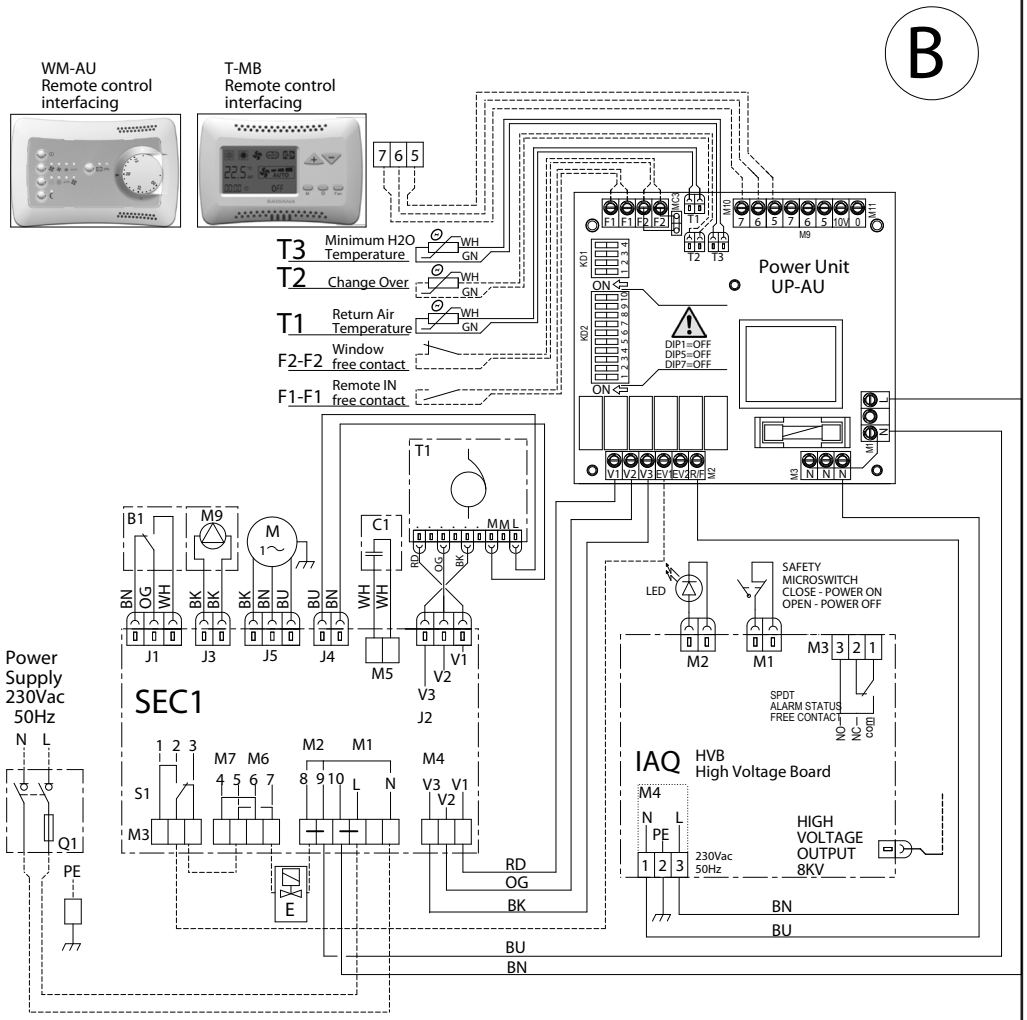
B
WM-AU
Remote control
interfacing
T-MB
Remote control
interfacing
T3 Minimum H2O Temperature
T2 Change Over
T1 Return Air Temperature
F2-F2 Window free contact
F1-F1 Remote IN free contact
Power Unit
UP-AU
DIP1=OFF
DIP5=OFF
DIP7=OFF
T1
B1
M9
M
C1
LED
SAFETY
MICROSWITCH
CLOSE - POWER ON
OPEN - POWER OFF
M2
M1
M3
SPDT
ALARM STATUS
FREE CONTACT
NO
NC
COM
Power
Supply
230Vac
50Hz
N L
Q1
PE
SEC1
J1
J3
J5
J4
M5
V1
V2
V3
J2
S1
M3
M7 M6
M2 M1
M4
E
IAQ
HVB
High Voltage Board
HIGH
VOLTAGE
OUTPUT
8KV
230Vac
50Hz
RD
OG
BK
BU
BN

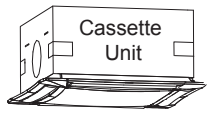
Cassette
Unit

SE-0479

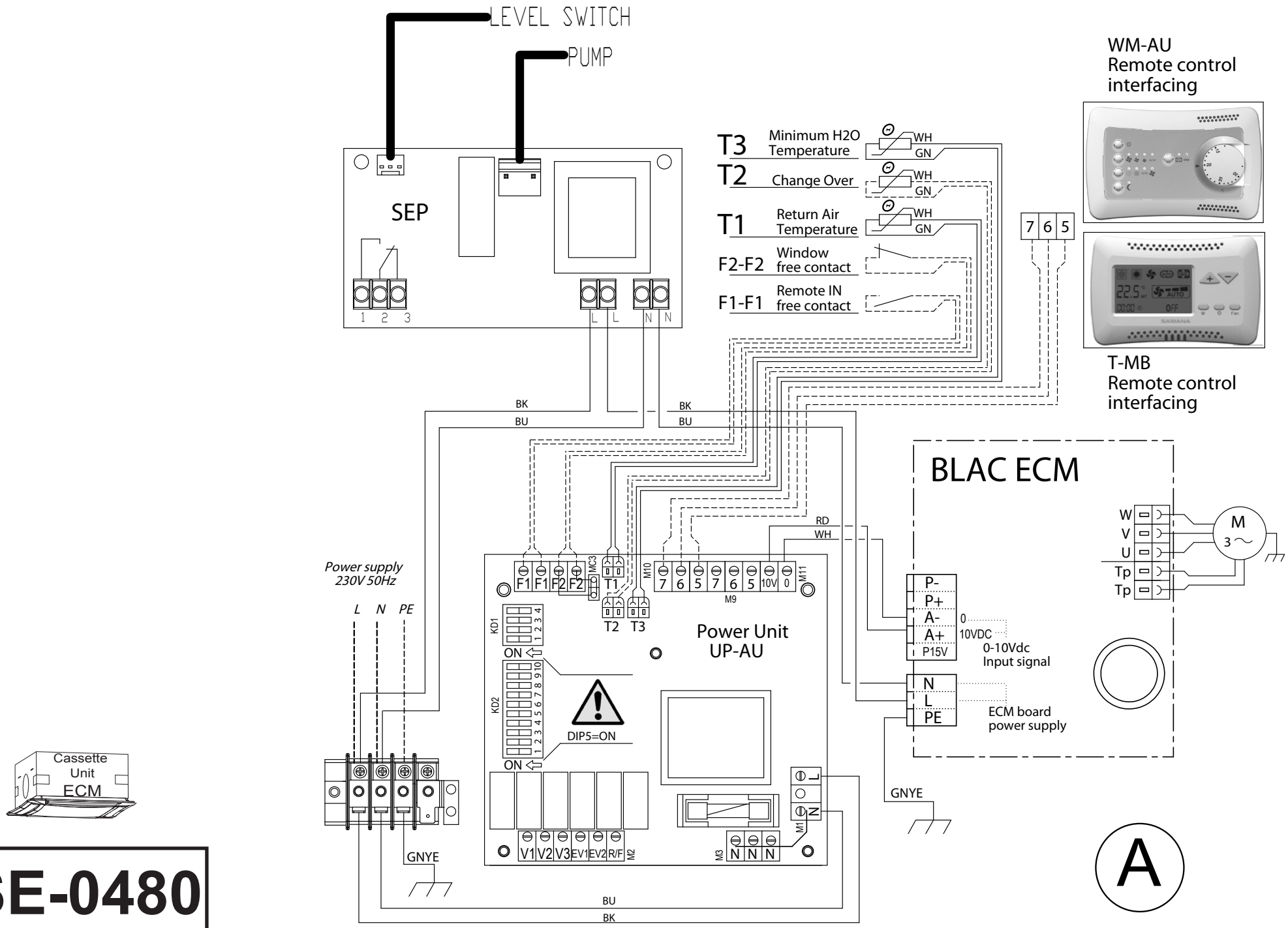
LEVEL SWITCH
PUMP
SEP
1 2 3
L L N N
T3 Minimum H2O Temperature
T2 Change Over
T1 Return Air Temperature
F2-F2 Window free contact
F1-F1 Remote IN free contact
WH
GN
7 6 5
WM-AU
Remote control interfacing
T-MB
Remote control interfacing
BK
BU
RD
WH
BLAC ECM
W
V
U
Tp
Tp
M
3~
P-
P+
A-
A+
P15V
0
10VDC
0-10Vdc
Input signal
N
L
PE
ECM board
power supply
GNYE
Power supply
230V 50Hz
L N PE
F1 F1 F2 F2
MC3
T1
T2 T3
M10
7 6 5 7 6 5 10V 0
M11
M9
KD1
KD2
ON
DIP5=ON
Power Unit
UP-AU
V1 V2 V3 EV1 EV2 R/F
M2
M3
N N N
M1
L
N
Cassette
Unit
ECM
A
SE-0480

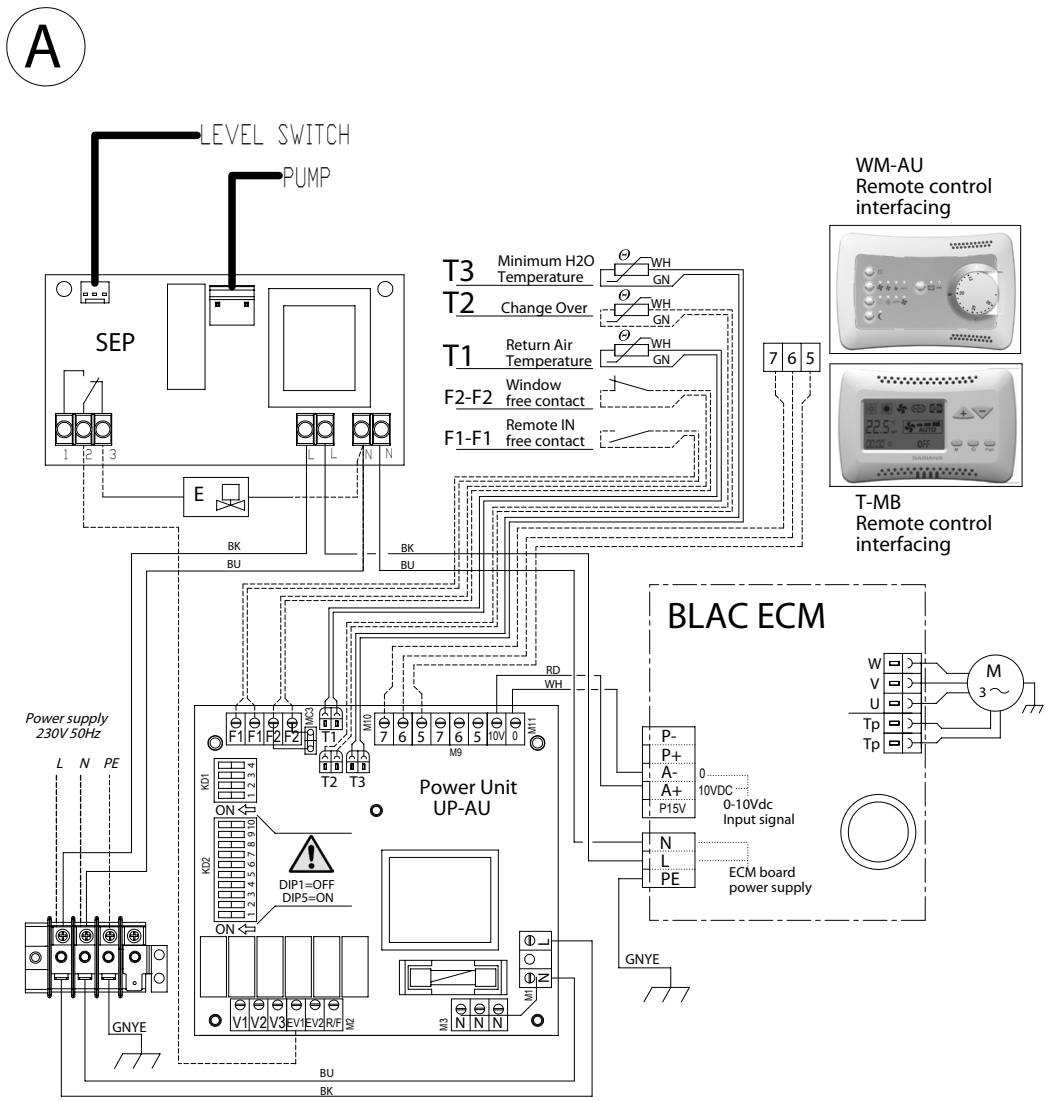
A
LEVEL SWITCH
PUMP
SEP
E
T3 Minimum H2O Temperature
T2 Change Over
T1 Return Air Temperature
F2-F2 Window free contact
F1-F1 Remote IN free contact
WM-AU
Remote control interfacing
T-MB
Remote control interfacing
BLAC ECM
Power supply 230V 50Hz
L N PE
Power Unit UP-AU
DIP1=OFF
DIP5=ON
0-10Vdc Input signal
ECM board power supply
GNYE

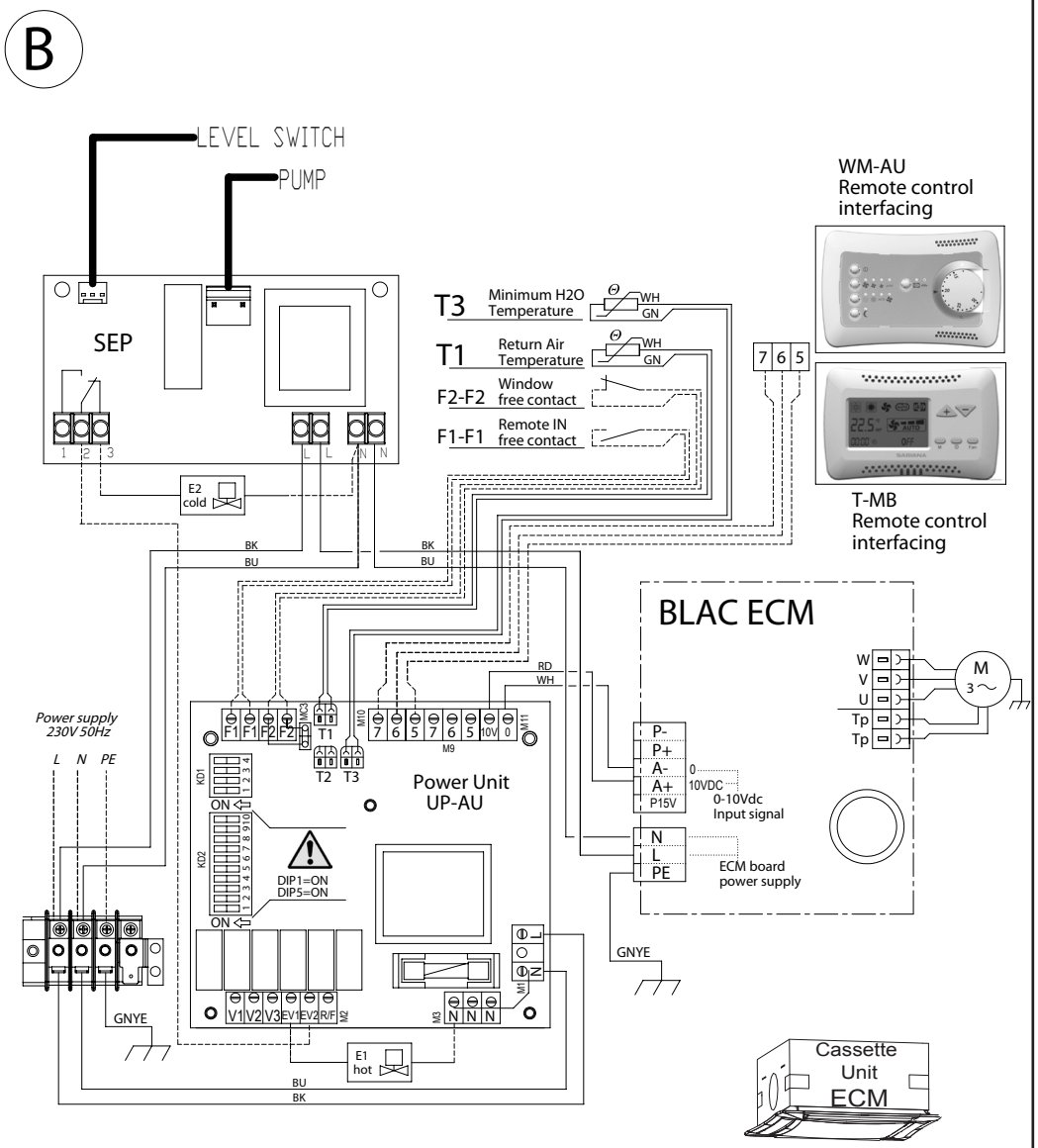
B
LEVEL SWITCH
PUMP
SEP
E2 cold
E1 hot
T3 Minimum H2O Temperature
T1 Return Air Temperature
F2-F2 Window free contact
F1-F1 Remote IN free contact
WM-AU
Remote control interfacing
T-MB
Remote control interfacing
BLAC ECM
Power supply 230V 50Hz
L N PE
Power Unit UP-AU
DIP1=ON
DIP5=ON
0-10Vdc Input signal
ECM board power supply
GNYE
Cassette Unit ECM

SE-0481

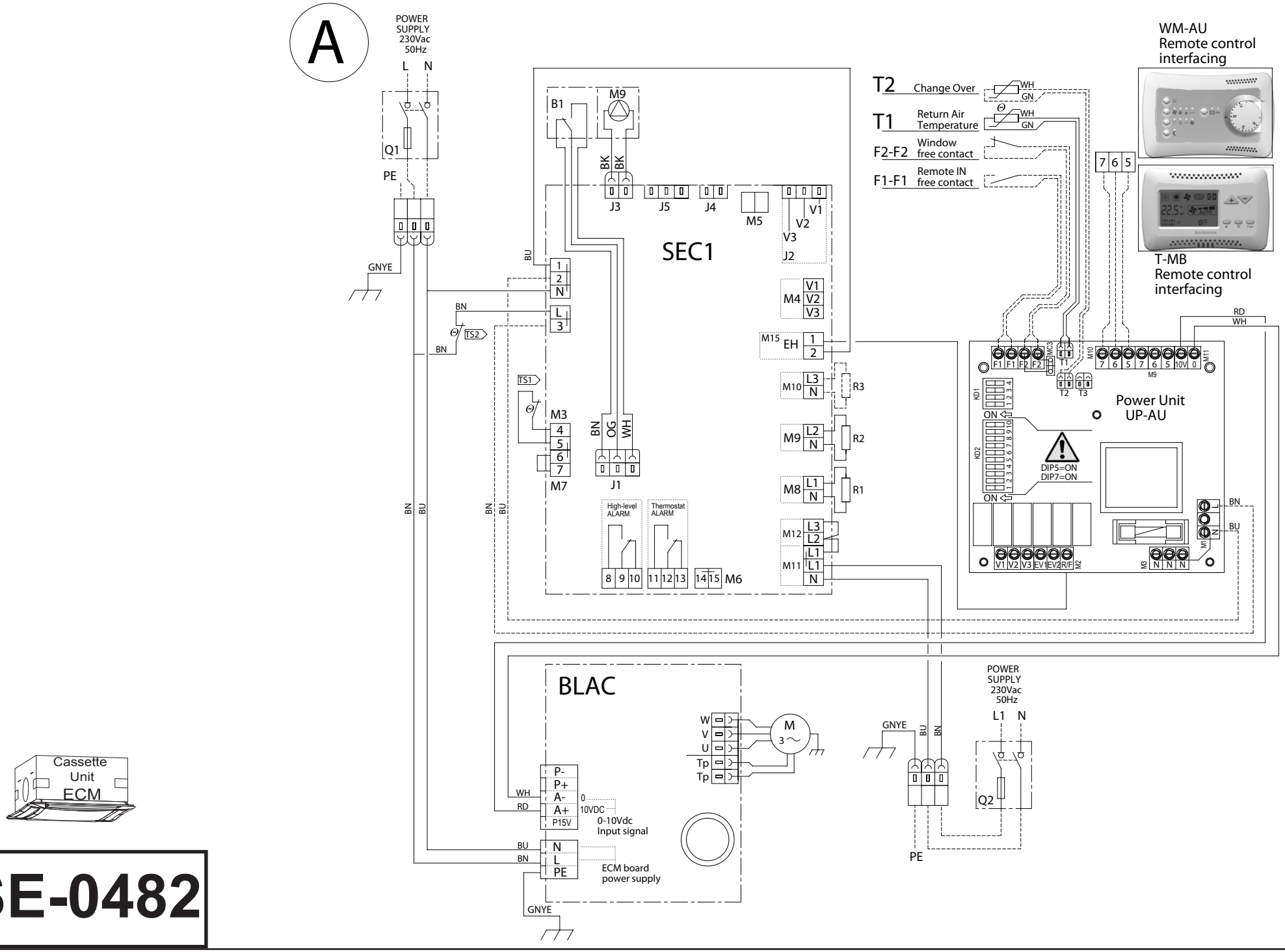
A
POWER SUPPLY 230Vac 50Hz
L N
Q1
PE
GNYE
SEC1
B1
M9
BK BK
J3
J5
J4
M5
V1
V2
V3
J2
M4
M15 EH
M10
M9
M8
M12
M11
R3
R2
R1
M3
M7
J1
BN OG WH
High-level ALARM
Thermostat ALARM
M6
TS1
TS2
T2 Change Over
T1 Return Air Temperature
F2-F2 Window free contact
F1-F1 Remote IN free contact
WM-AU Remote control interfacing
T-MB Remote control interfacing
Power Unit UP-AU
DIP5=ON
DIP7=ON
BLAC
W
V
U
Tp
Tp
M 3~
P-
P+
A-
A+
P15V
0-10Vdc Input signal
N
L
PE
ECM board power supply
POWER SUPPLY 230Vac 50Hz
L1 N
Q2
Cassette Unit ECM

SE-0482

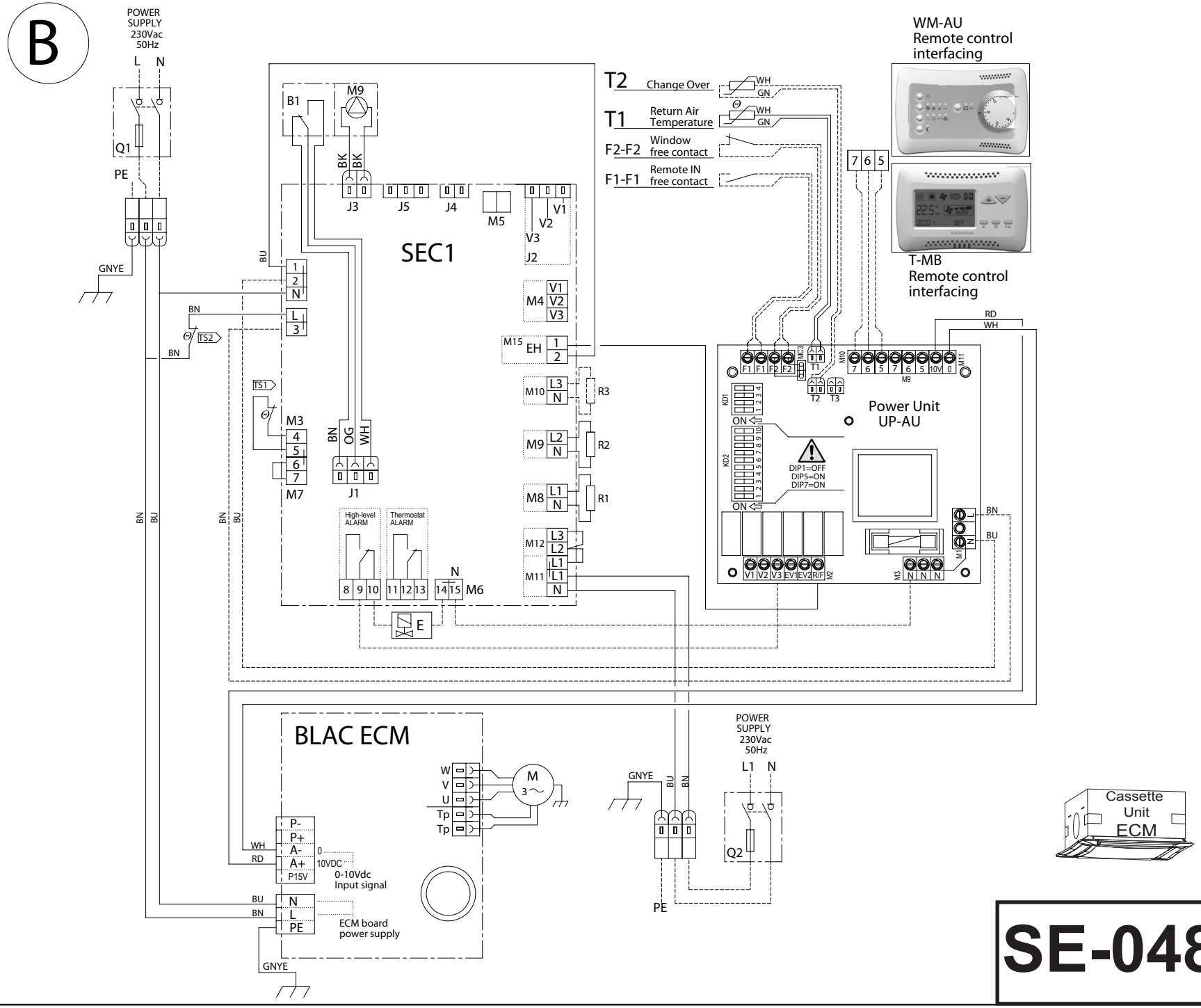
B
POWER SUPPLY 230Vac 50Hz
L N
Q1
PE
GNYE
SEC1
B1
M9
J3
J5
J4
M5
V1
V2
V3
J2
M4
M15
EH
M10
M9
M8
M12
M11
R3
R2
R1
M3
M7
J1
TS1
TS2
High-level ALARM
Thermostat ALARM
M6
E
T2 Change Over
T1 Return Air Temperature
F2-F2 Window free contact
F1-F1 Remote IN free contact
WM-AU Remote control interfacing
T-MB Remote control interfacing
Power Unit UP-AU
DIP1=OFF
DIP5=ON
DIP7=ON
BLAC ECM
0-10Vdc Input signal
ECM board power supply
POWER SUPPLY 230Vac 50Hz
L1 N
Q2
Cassette Unit ECM
SE-0482

B - Impianto 2 tubi (1 valvola)
- Two-pipe plant (1 valve)

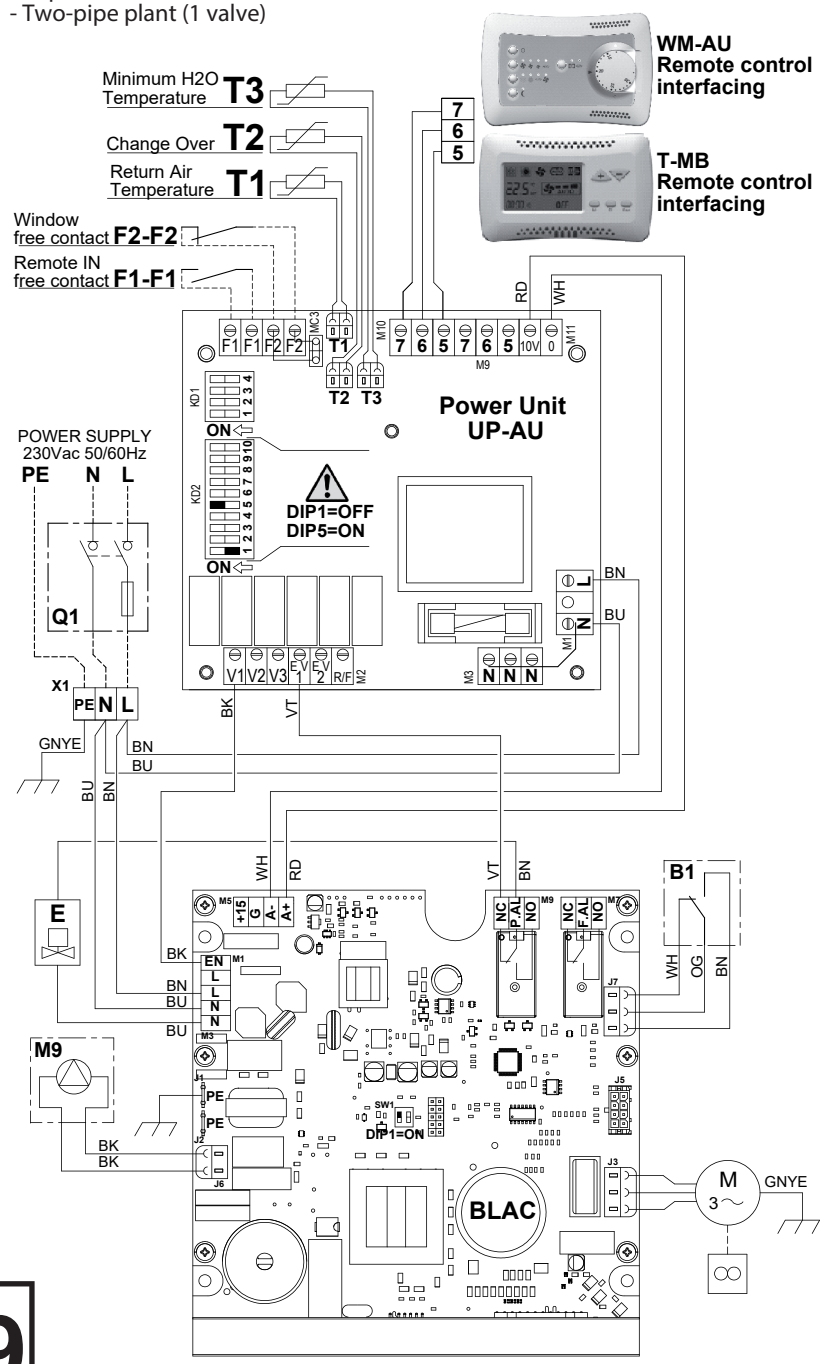

C - Impianto 4 tubi (2 valvole)
- Four-pipe plant (2 valves)

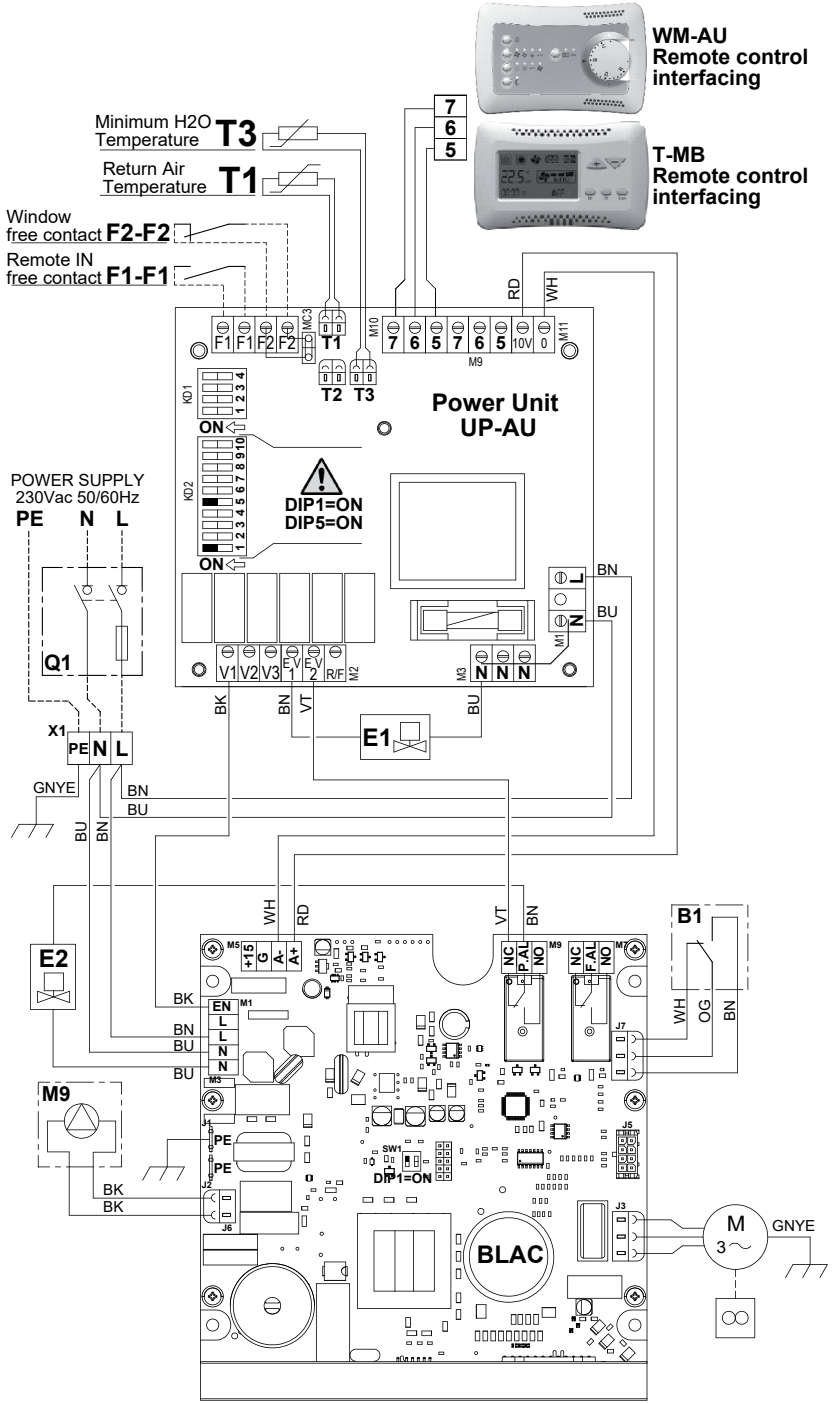

SE-0689

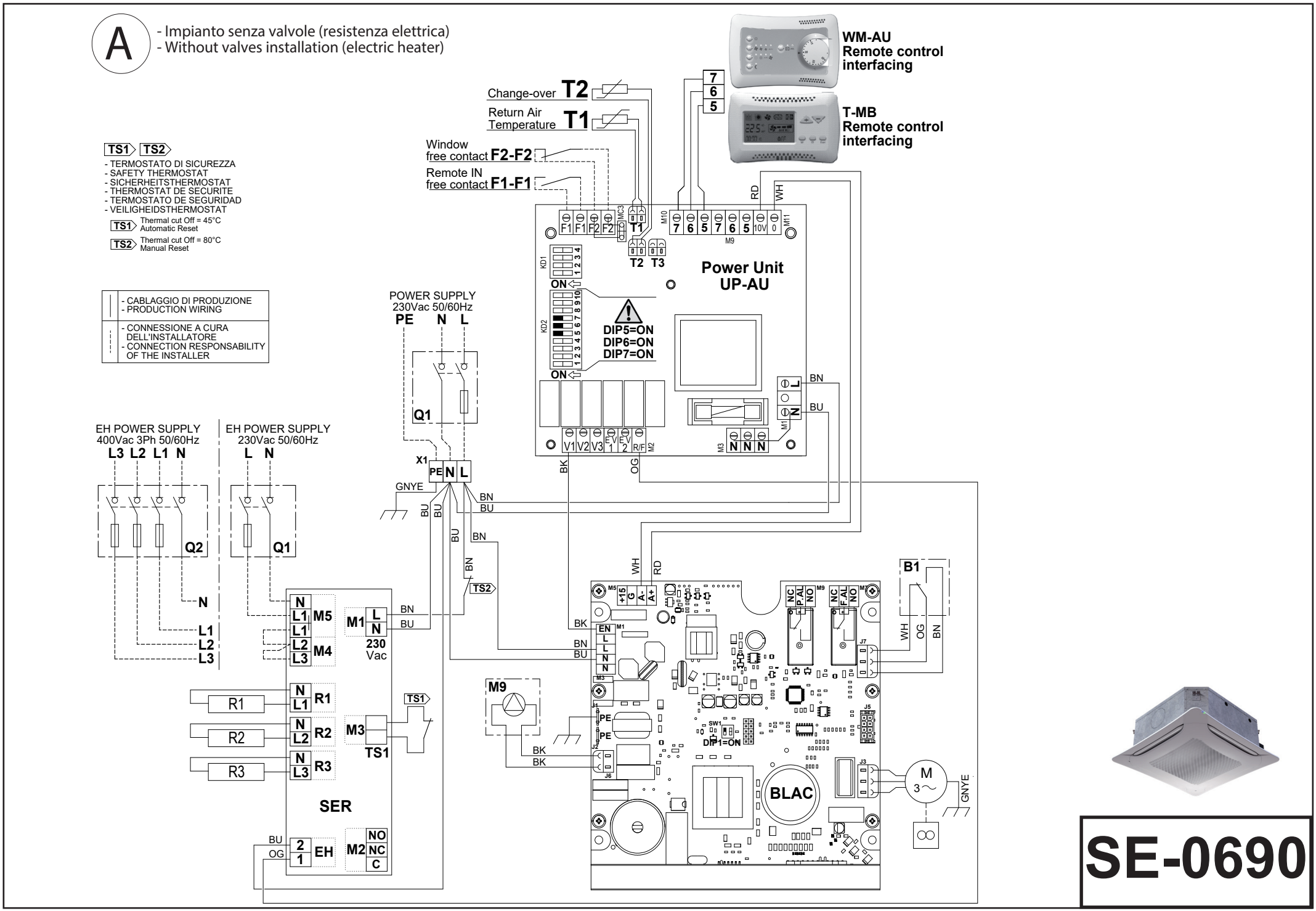
A
- Impianto senza valvole (resistenza elettrica)
- Without valves installation (electric heater)
WM-AU
Remote control
interfacing
T-MB
Remote control
interfacing
Change-over T2
Return Air
Temperature T1
Window
free contact F2-F2
Remote IN
free contact F1-F1
TS1 TS2
- TERMOSTATO DI SICUREZZA
- SAFETY THERMOSTAT
- SICHERHEITSTHERMOSTAT
- THERMOSTAT DE SECURITE
- TERMOSTATO DE SEGURIDAD
- VEILIGHEIDSTHERMOSTAT
TS1 Thermal cut Off = 45°C
Automatic Reset
TS2 Thermal cut Off = 80°C
Manual Reset
- CABLAGGIO DI PRODUZIONE
- PRODUCTION WIRING
- CONNESSIONE A CURA
DELL'INSTALLATORE
- CONNECTION RESPONSABILITY
OF THE INSTALLER
POWER SUPPLY
230Vac 50/60Hz
PE N L
Power Unit
UP-AU
DIP5=ON
DIP6=ON
DIP7=ON
ON
EH POWER SUPPLY
400Vac 3Ph 50/60Hz
L3 L2 L1 N
EH POWER SUPPLY
230Vac 50/60Hz
L N
Q1
Q2
X1
GNYE
SER
M5
M4
M1
230
Vac
R1
R2
R3
M3
TS1
TS2
M9
EH
M2
NO
NC
C
B1
BLAC
DIP1=ON
M
3~
SE-0690

B

- Impianto 2 tubi (resistenza elettrica + valvola acqua)
- Two-pipe plant (electric heater + valve)

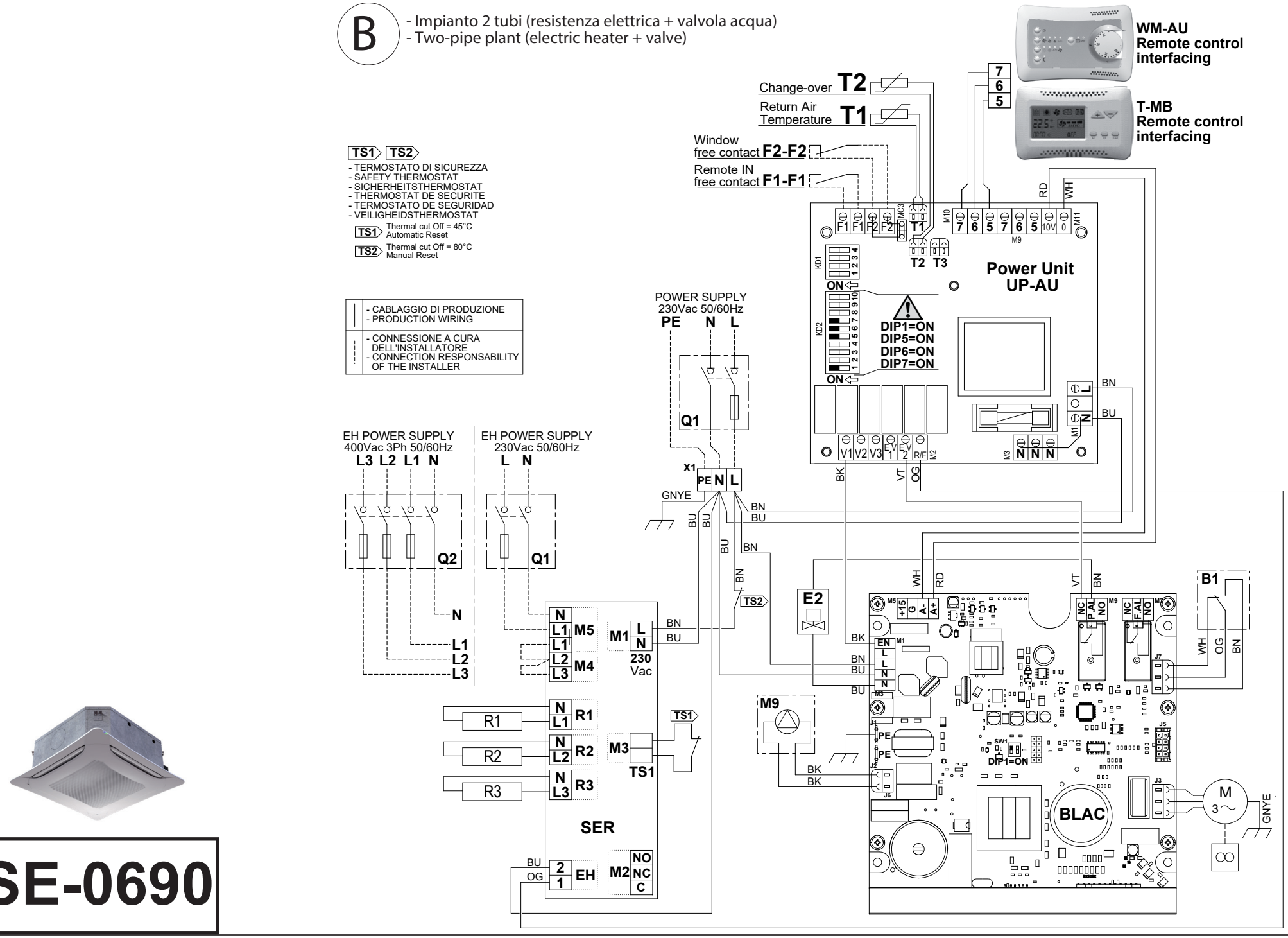

SE-0690

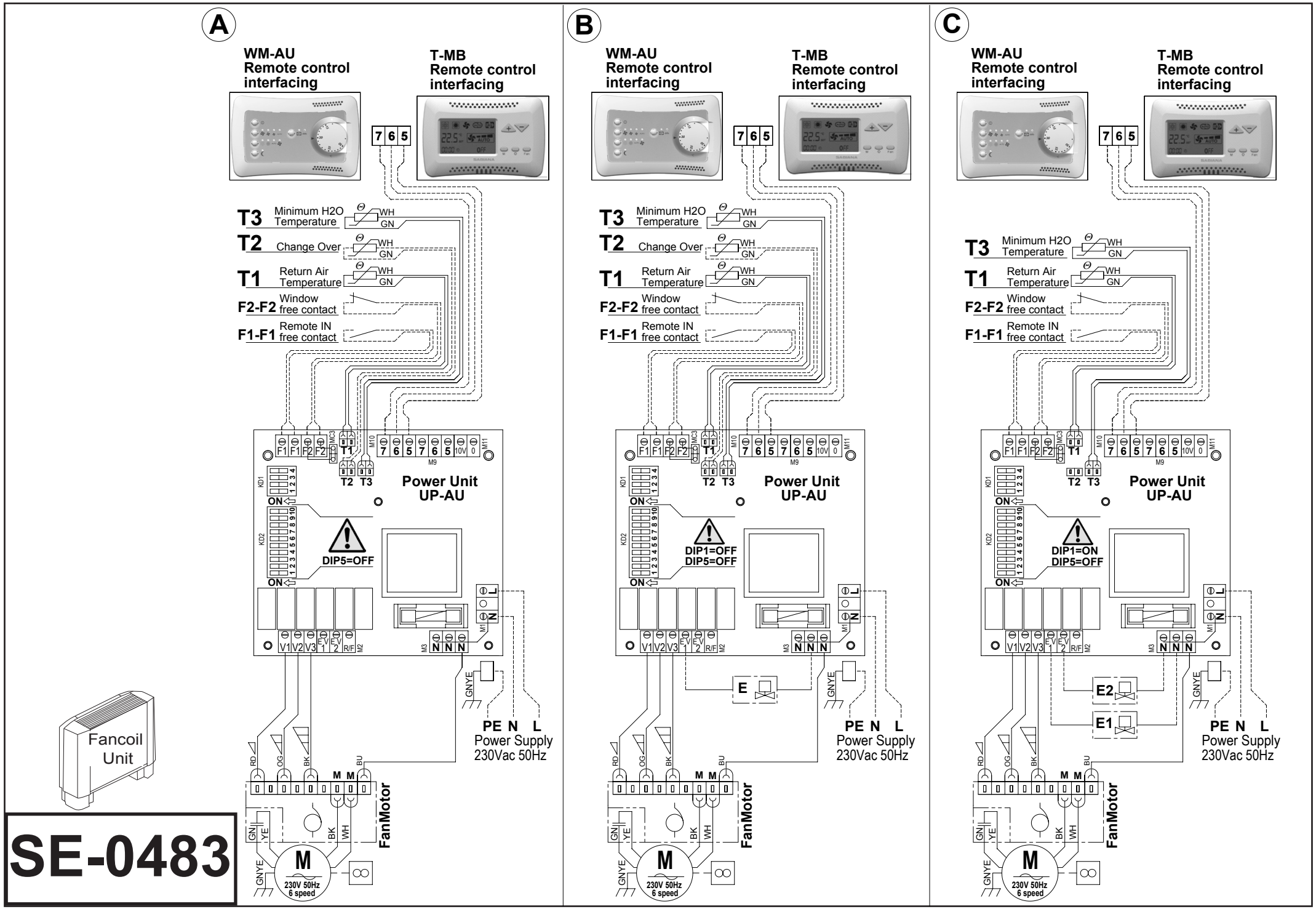
A
B
C
WM-AU
Remote control
interfacing
T-MB
Remote control
interfacing
7 6 5
T3 Minimum H2O Temperature
T2 Change Over
T1 Return Air Temperature
F2-F2 Window free contact
F1-F1 Remote IN free contact
WH
GN
Power Unit
UP-AU
DIP5=OFF
DIP1=OFF
DIP5=OFF
DIP1=ON
DIP5=OFF
ON
E
E2
E1
PE N L
Power Supply
230Vac 50Hz
FanMotor
M
230V 50Hz
6 speed
Fancoil
Unit
SE-0483

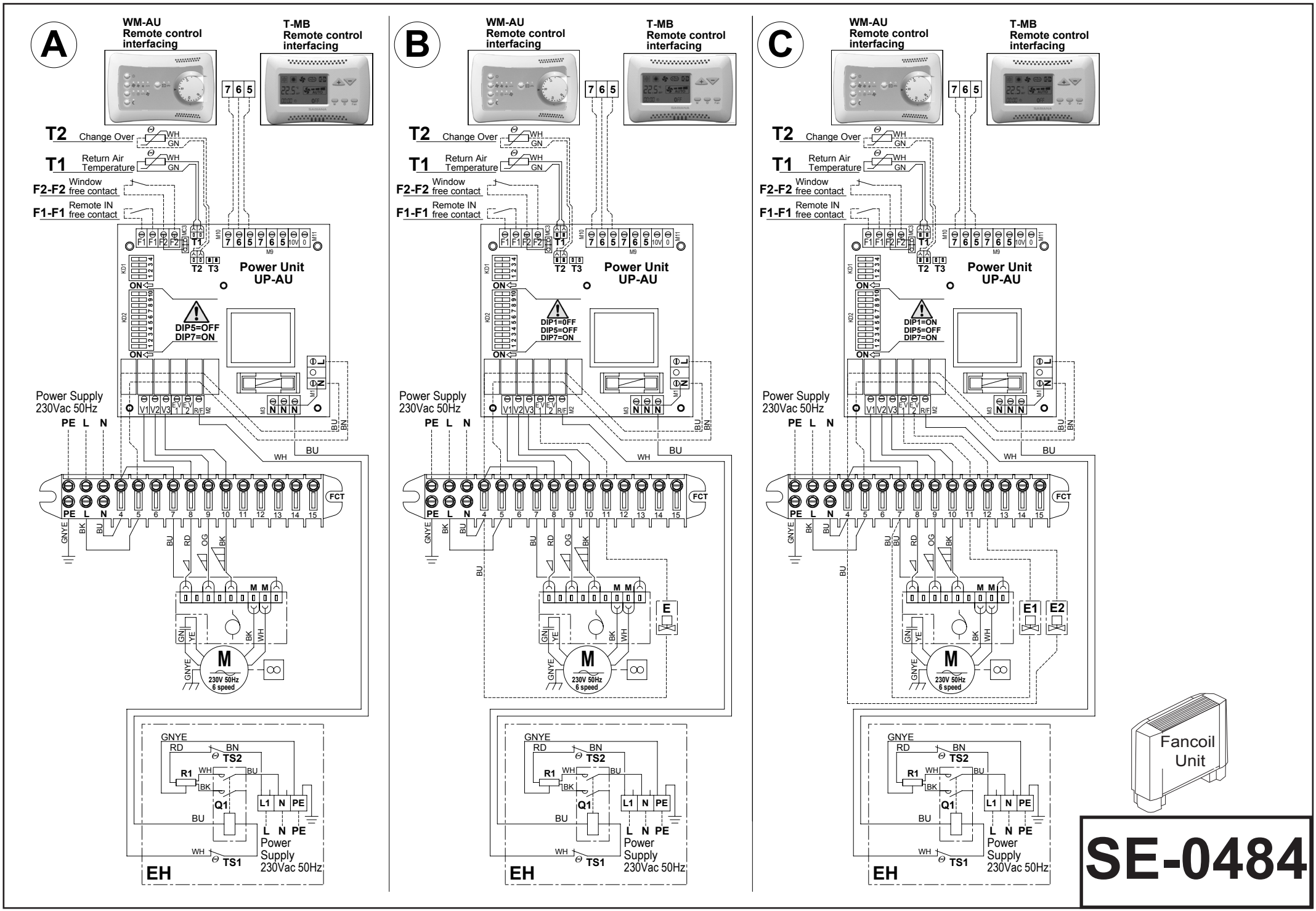
A
B
C
WM-AU
Remote control
interfacing
T-MB
Remote control
interfacing
T2 Change Over
T1 Return Air Temperature
F2-F2 Window free contact
F1-F1 Remote IN free contact
Power Unit
UP-AU
DIP5=OFF
DIP7=ON
DIP1=0FF
DIP5=OFF
DIP7=ON
DIP1=ON
DIP5=OFF
DIP7=ON
Power Supply
230Vac 50Hz
PE L N
FCT
M
230V 50Hz
6 speed
E
E1
E2
TS2
R1
Q1
TS1
L1 N PE
L N PE
Power
Supply
230Vac 50Hz
EH
Fancoil
Unit
SE-0484

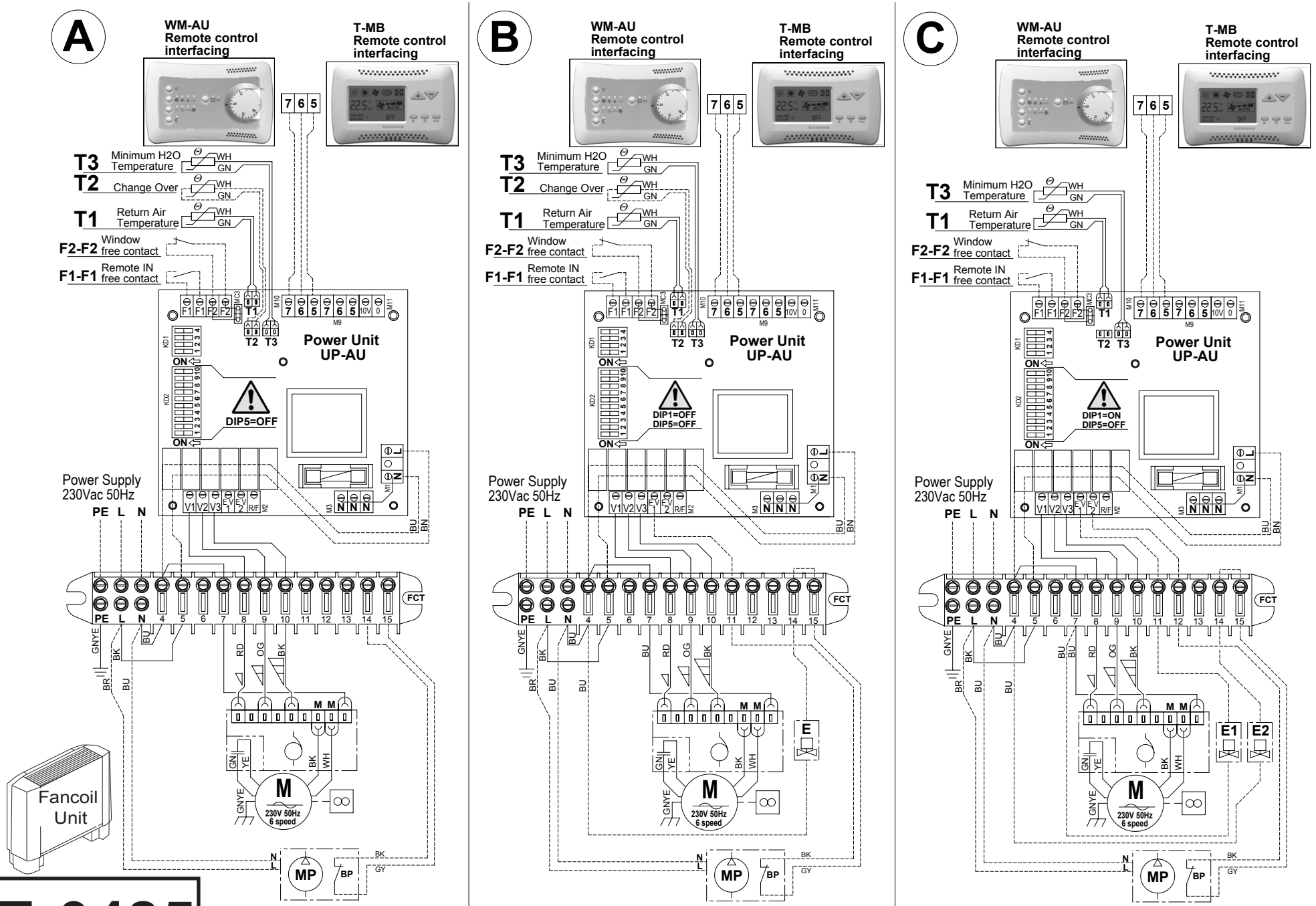
A
B
C
WM-AU
Remote control
interfacing
T-MB
Remote control
interfacing
7 6 5
T3 Minimum H2O Temperature
T2 Change Over
T1 Return Air Temperature
F2-F2 Window free contact
F1-F1 Remote IN free contact
WH
GN
Power Unit
UP-AU
DIP5=OFF
DIP1=OFF
DIP5=OFF
DIP1=ON
DIP5=OFF
ON
Power Supply
230Vac 50Hz
PE L N
FCT
M
230V 50Hz
6 speed
MP
BP
E
E1
E2
Fancoil
Unit

SE-0485

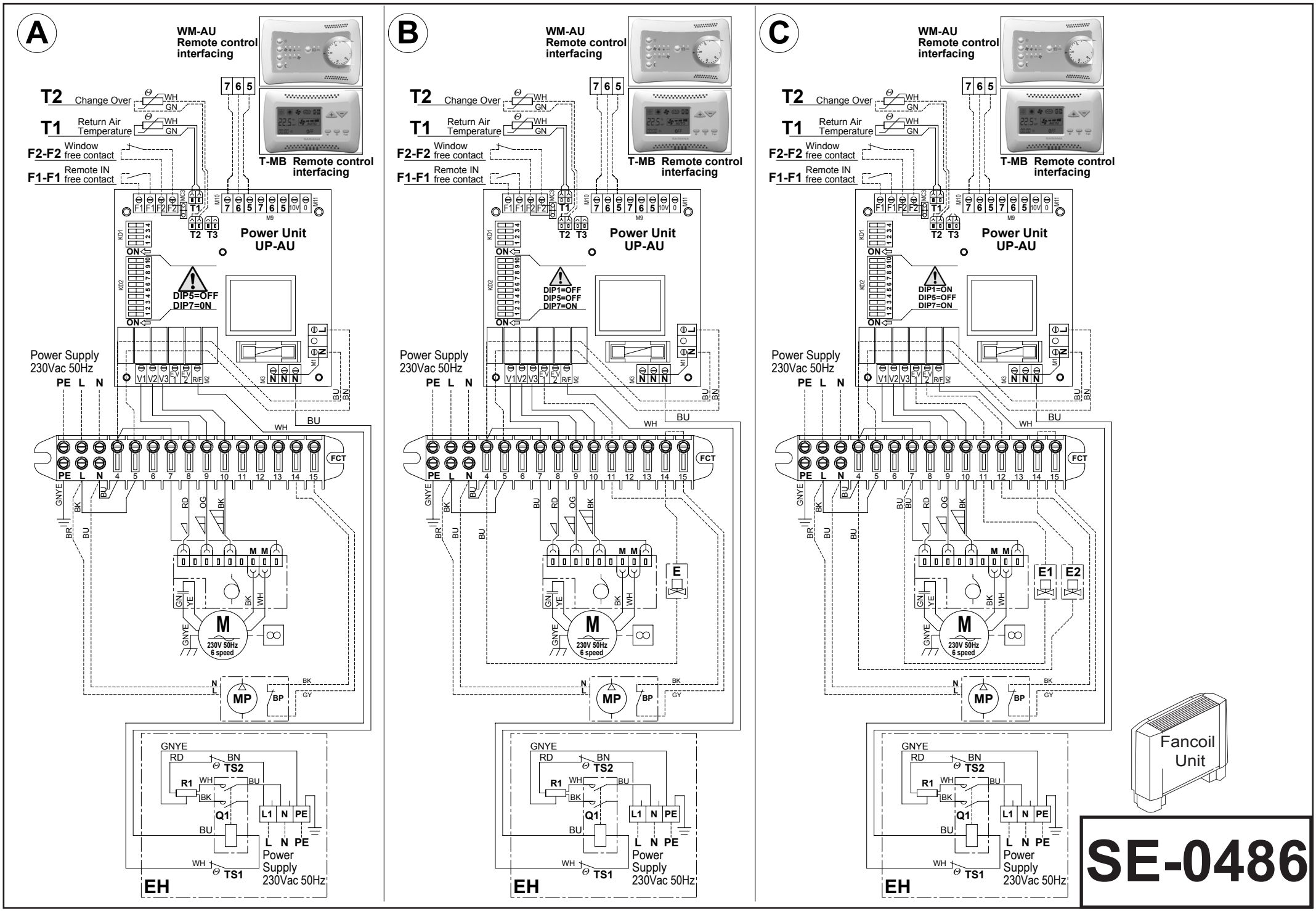
A
B
C
WM-AU
Remote control
interfacing
T2 Change Over
T1 Return Air Temperature
F2-F2 Window free contact
F1-F1 Remote IN free contact
T-MB Remote control interfacing
Power Unit
UP-AU
DIP5=OFF
DIP7=0N
DIP1=OFF
DIP5=OFF
DIP7=ON
DIP1=ON
DIP5=OFF
DIP7=ON
Power Supply
230Vac 50Hz
PE L N
FCT
M
230V 50Hz
6 speed
MP
BP
E
E1
E2
TS2
R1
Q1
TS1
L1 N PE
L N PE
Power
Supply
230Vac 50Hz
EH
Fancoil
Unit
SE-0486

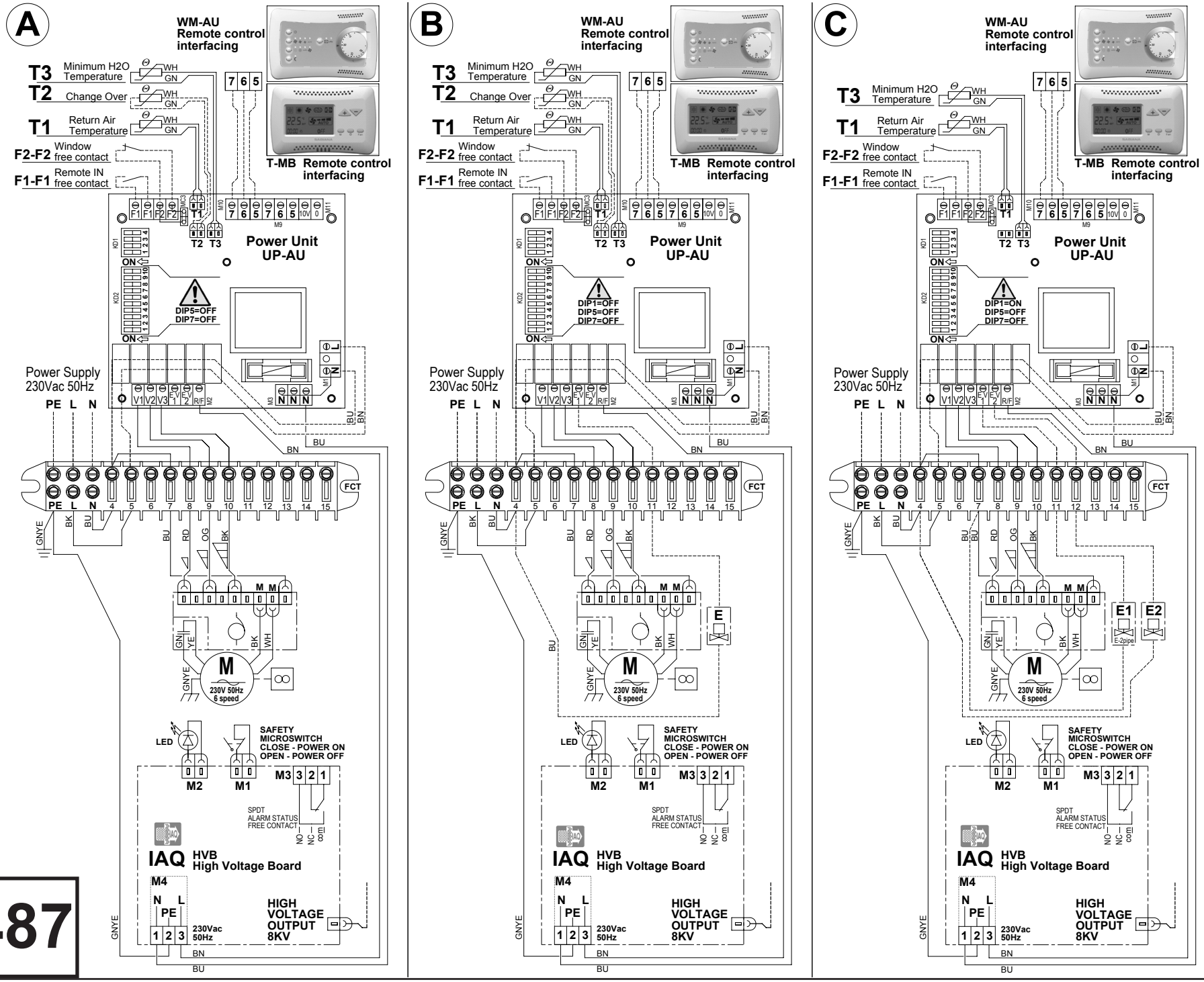
A
B
C
WM-AU
Remote control
interfacing
T-MB Remote control
interfacing
T3 Minimum H2O Temperature
T2 Change Over
T1 Return Air Temperature
F2-F2 Window free contact
F1-F1 Remote IN free contact
Power Unit
UP-AU
DIP5=OFF
DIP7=OFF
DIP1=OFF
DIP5=OFF
DIP7=OFF
DIP1=ON
DIP5=OFF
DIP7=OFF
Power Supply
230Vac 50Hz
PE L N
FCT
230V 50Hz
6 speed
LED
SAFETY
MICROSWITCH
CLOSE - POWER ON
OPEN - POWER OFF
SPDT
ALARM STATUS
FREE CONTACT
IAQ HVB
High Voltage Board
HIGH
VOLTAGE
OUTPUT
8KV
230Vac
50Hz
E1
E2
E-2pipe
Fancoil
Unit

SE-0487

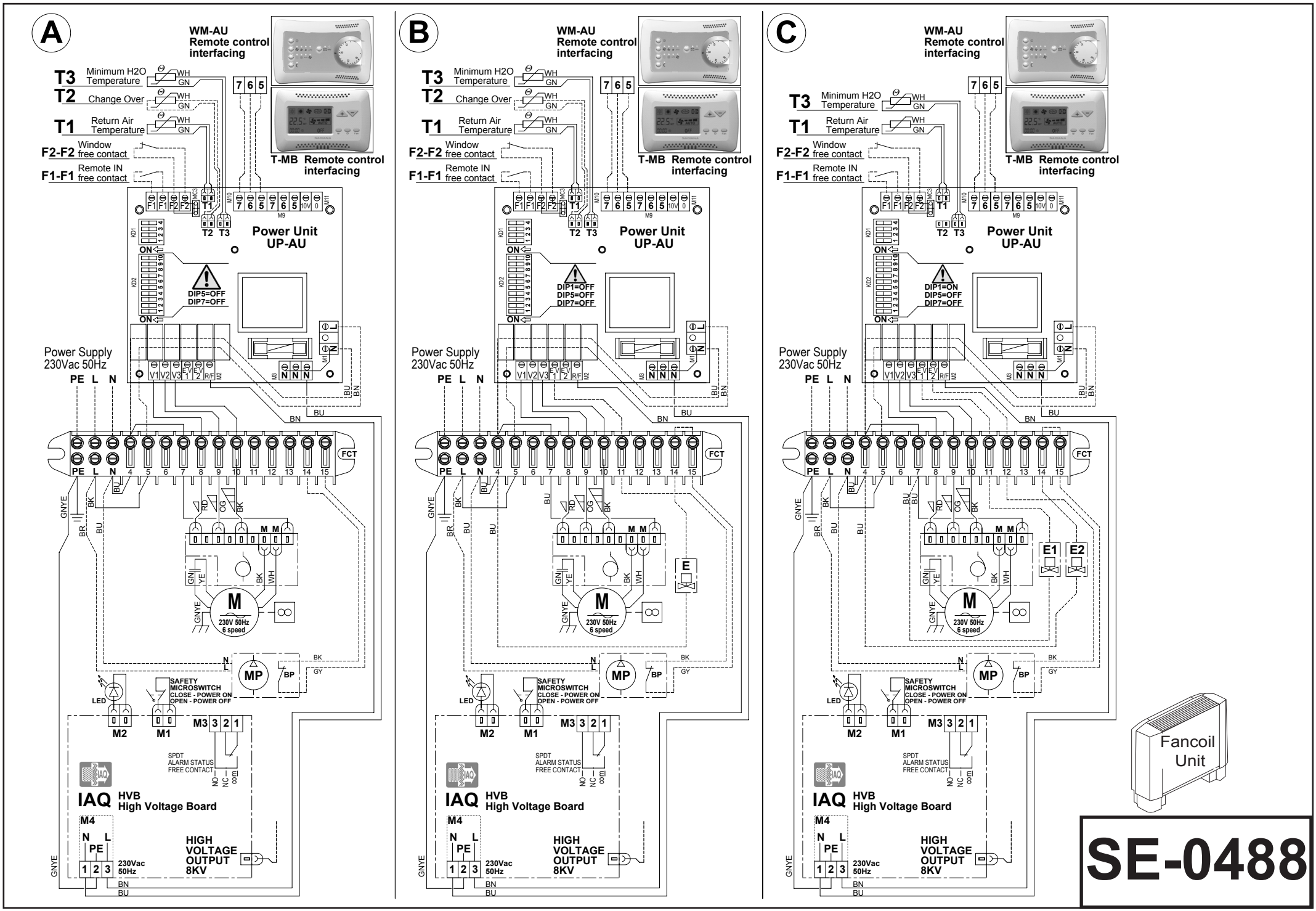
A
B
C
WM-AU
Remote control
interfacing
T-MB Remote control
interfacing
T3 Minimum H2O Temperature
T2 Change Over
T1 Return Air Temperature
F2-F2 Window free contact
F1-F1 Remote IN free contact
Power Unit
UP-AU
DIP5=OFF
DIP7=OFF
DIP1=OFF
DIP5=OFF
DIP7=OFF
DIP1=ON
DIP5=OFF
DIP7=OFF
Power Supply
230Vac 50Hz
PE L N
FCT
M
230V 50Hz
6 speed
MP
BP
LED
SAFETY
MICROSWITCH
CLOSE - POWER ON
OPEN - POWER OFF
M2
M1
M3
SPDT
ALARM STATUS
FREE CONTACT
NO NC com
IAQ HVB
High Voltage Board
M4
N PE L
230Vac
50Hz
HIGH
VOLTAGE
OUTPUT
8KV
E
E1
E2
Fancoil
Unit
SE-0488

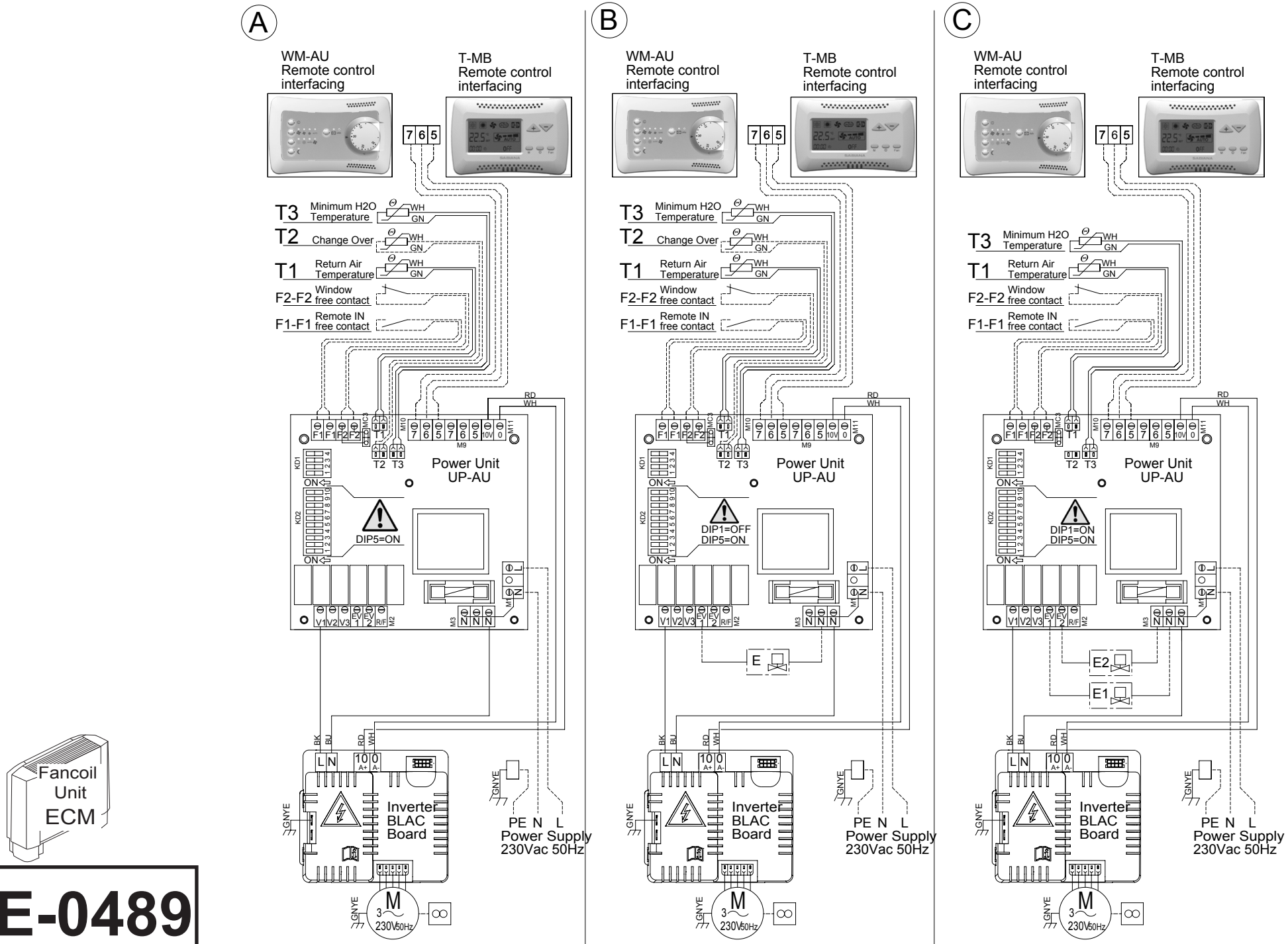
A
B
C
WM-AU
Remote control
interfacing
T-MB
Remote control
interfacing
7 6 5
T3 Minimum H2O Temperature
T2 Change Over
T1 Return Air Temperature
F2-F2 Window free contact
F1-F1 Remote IN free contact
WH
GN
RD
WH
Power Unit
UP-AU
DIP5=ON
DIP1=OFF
DIP5=ON
DIP1=ON
DIP5=ON
E
E2
E1
Fancoil
Unit
ECM
Inverter
BLAC
Board
PE N L
Power Supply
230Vac 50Hz
GNYE
BK
BU
RD
WH
230V 50Hz

SE-0489

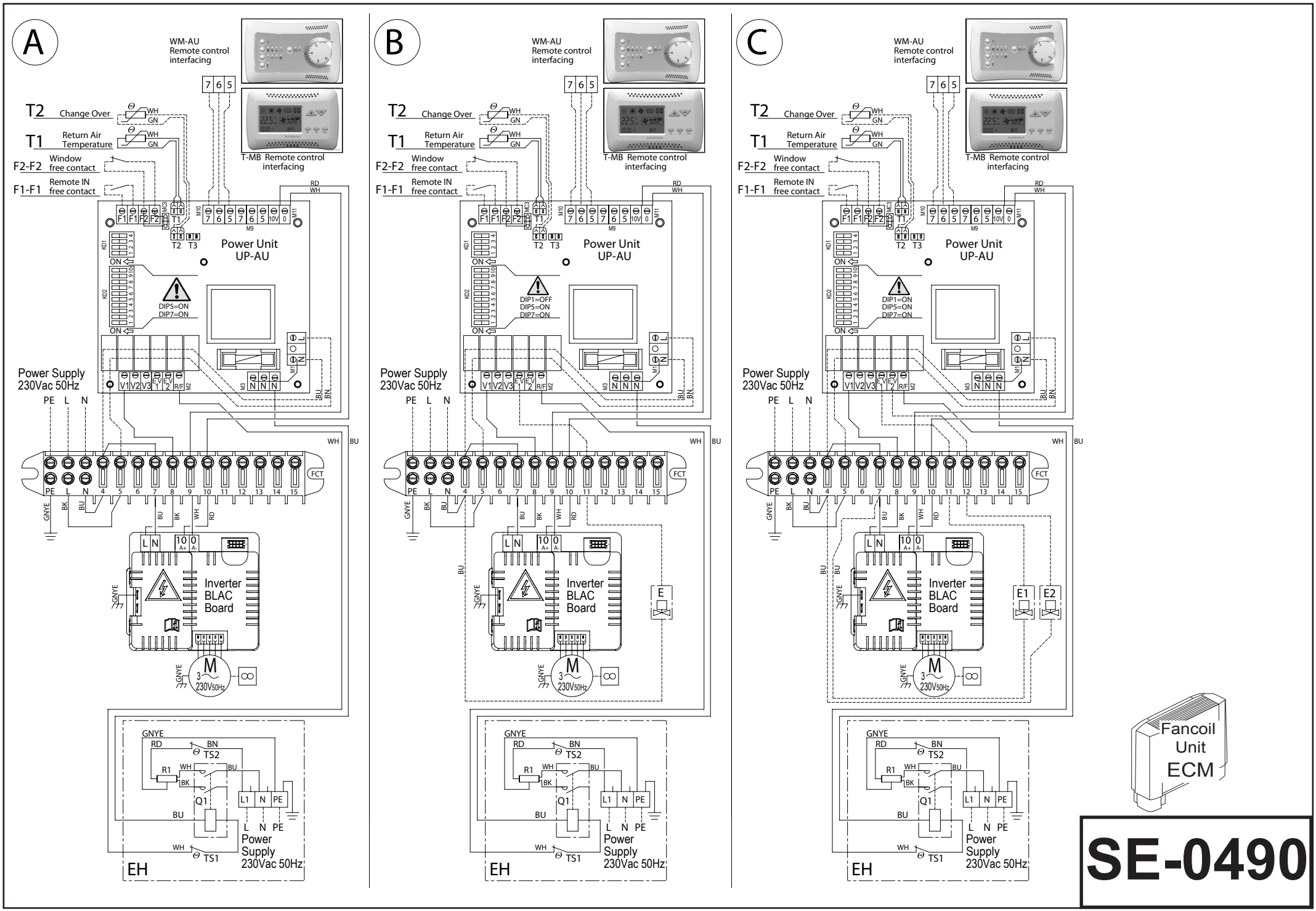
A
B
C
WM-AU
Remote control
interfacing
T-MB Remote control
interfacing
T2 Change Over
T1 Return Air Temperature
F2-F2 Window free contact
F1-F1 Remote IN free contact
Power Unit
UP-AU
DIP5=ON
DIP7=ON
DIP1=OFF
DIP5=ON
DIP7=ON
DIP1=ON
DIP5=ON
DIP7=ON
Power Supply
230Vac 50Hz
PE L N
Inverter
BLAC
Board
E
E1
E2
Fancoil
Unit
ECM
TS2
TS1
EH
Power
Supply
230Vac 50Hz
SE-0490

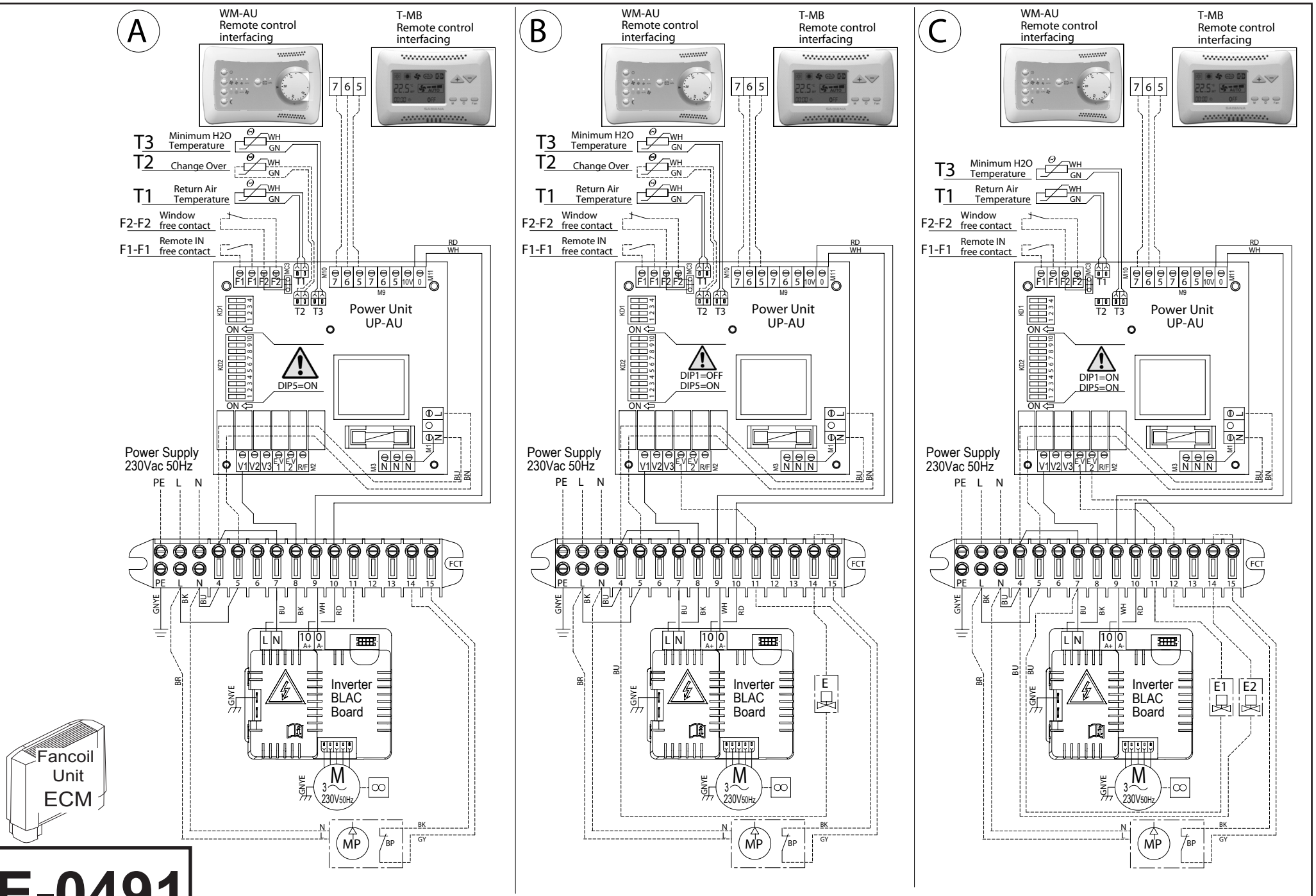
A
B
C
WM-AU
Remote control
interfacing
T-MB
Remote control
interfacing
T3 Minimum H2O Temperature
T2 Change Over
T1 Return Air Temperature
F2-F2 Window free contact
F1-F1 Remote IN free contact
Power Unit
UP-AU
DIP5=ON
DIP1=OFF
DIP5=ON
DIP1=ON
DIP5=ON
Power Supply
230Vac 50Hz
PE L N
Inverter
BLAC
Board
E
E1
E2
Fancoil
Unit
ECM
MP
BP
SE-0491

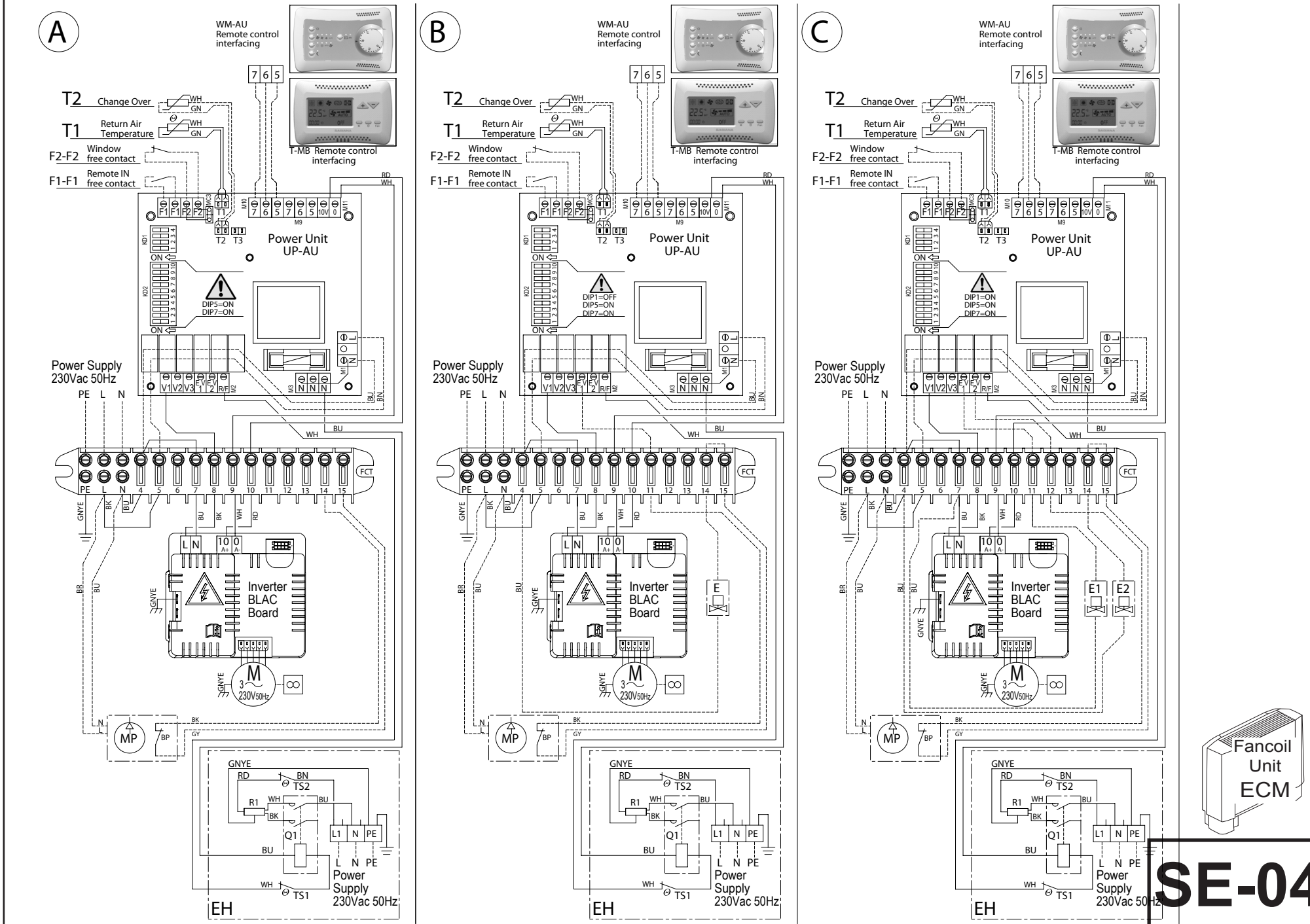
A
B
C
WM-AU
Remote control
interfacing
T-MB Remote control
interfacing
T2 Change Over
T1 Return Air Temperature
F2-F2 Window free contact
F1-F1 Remote IN free contact
Power Unit
UP-AU
DIP5=ON
DIP7=ON
DIP1=OFF
DIP5=ON
DIP7=ON
DIP1=ON
DIP5=ON
DIP7=ON
Power Supply
230Vac 50Hz
Inverter
BLAC
Board
230V50Hz
MP
BP
TS2
TS1
Q1
R1
Power
Supply
230Vac 50Hz
EH
Fancoil
Unit
ECM
SE-0492

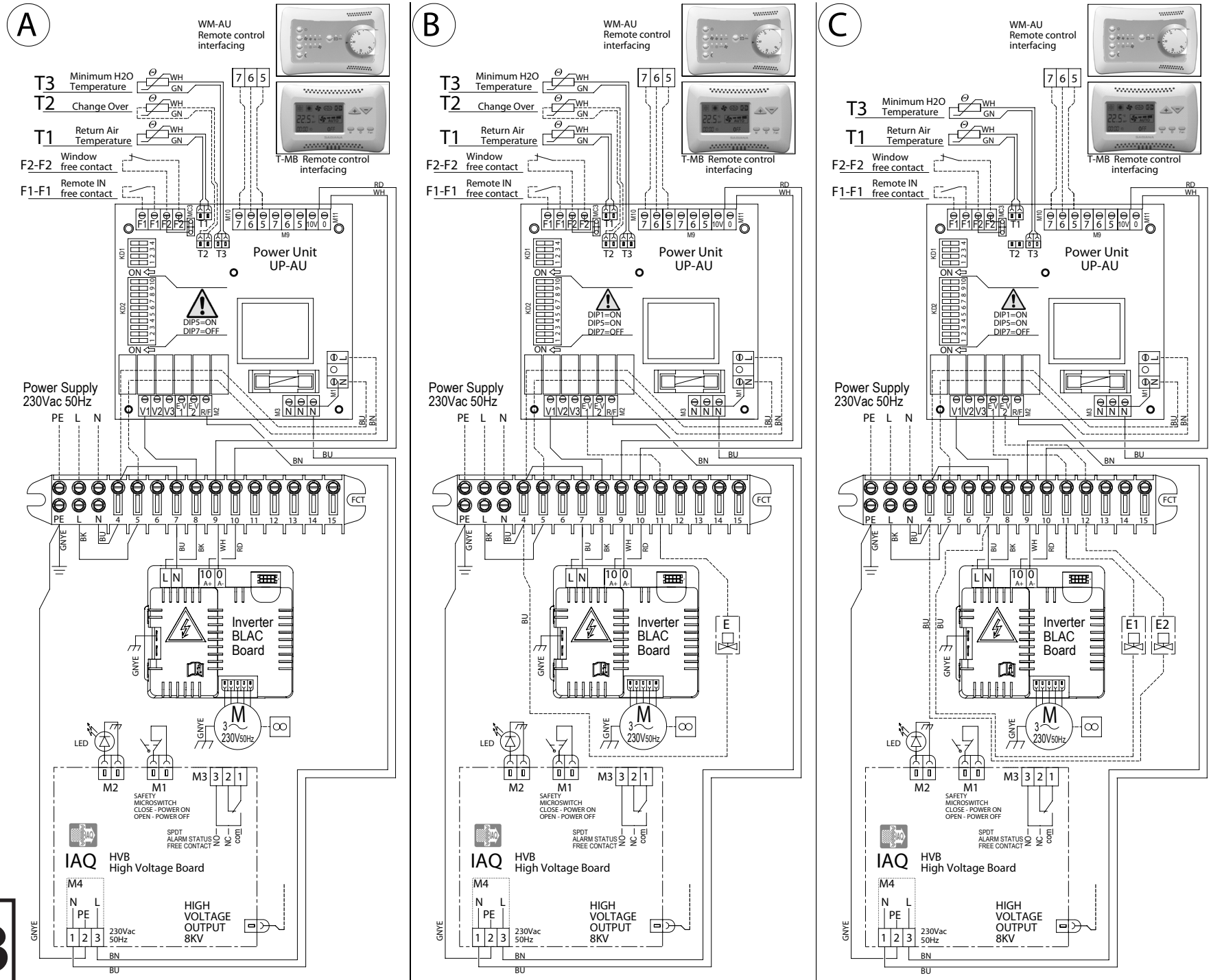
A
B
C
WM-AU
Remote control
interfacing
T-MB Remote control
interfacing
T3 Minimum H2O Temperature
T2 Change Over
T1 Return Air Temperature
F2-F2 Window free contact
F1-F1 Remote IN free contact
Power Unit
UP-AU
DIP5=ON
DIP7=OFF
DIP1=ON
DIP5=ON
DIP7=OFF
Power Supply
230Vac 50Hz
PE L N
Inverter
BLAC
Board
LED
M2
M1
SAFETY
MICROSWITCH
CLOSE - POWER ON
OPEN - POWER OFF
M3
SPDT
ALARM STATUS
FREE CONTACT
NO NC com
IAQ
HVB
High Voltage Board
M4
N PE L
230Vac
50Hz
HIGH
VOLTAGE
OUTPUT
8KV
E
E1
E2
Fancoil
Unit
ECM

SE-0493

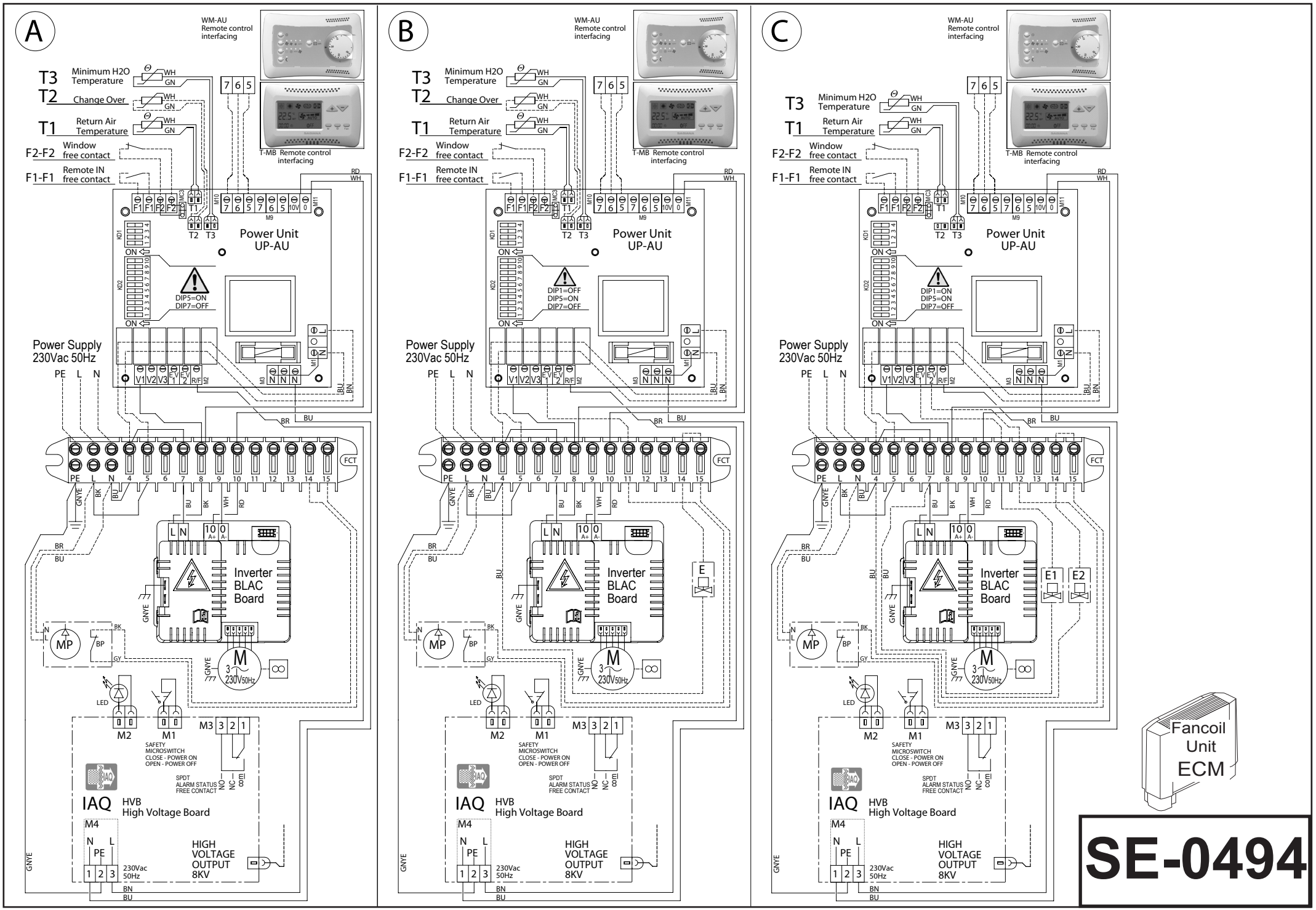
A
B
C
WM-AU
Remote control
interfacing
T-MB Remote control
interfacing
T3 Minimum H2O Temperature
T2 Change Over
T1 Return Air Temperature
F2-F2 Window free contact
F1-F1 Remote IN free contact
Power Unit
UP-AU
DIP5=ON
DIP7=OFF
DIP1=OFF
DIP5=ON
DIP7=OFF
DIP1=ON
DIP5=ON
DIP7=OFF
Power Supply
230Vac 50Hz
Inverter
BLAC
Board
MP
M
230V50Hz
LED
M2
M1
M3
SAFETY
MICROSWITCH
CLOSE - POWER ON
OPEN - POWER OFF
SPDT
ALARM STATUS
FREE CONTACT
IAQ HVB
High Voltage Board
M4
230Vac
50Hz
HIGH
VOLTAGE
OUTPUT
8KV
E
E1
E2
Fancoil
Unit
ECM
SE-0494